Workplace Exposure Standards

EFFECTIVE FROM 1994

OSH
OCCUPATIONAL SAFETY & HEALTH SERVICE

DEPARTMENT OF LABOUR
TE TARI MAHI

Published by the Occupational Safety and Health Service
Department of Labour
Wellington
New Zealand

November 1994

ISBN 0-477-03555-8
$10 (incl. GST)

Preface

The workplace standards contained in this publication have been endorsed as recommended guidelines for those involved in occupational health practice by the Exposure Standards Committee appointed by the Occupational Safety and Health Service (OSH) of the Department of Labour.

These standards are not intended to be used to indicate the boundary between conditions that are hazardous and those that are safe. Where conditions in a place of work are potentially hazardous to health, the Health and Safety in Employment Act 1992 requires employers to take all practicable steps to ensure that the hazard does not cause harm to employees and others. The Act requires significant hazards* to be controlled by applying a hierarchy of measures:

Elimination: Discontinuing a process that involves hazardous exposures, or the substitution of a substance with one that results in less hazardous exposures;

Isolation: Placing a barrier between the process and workers that results in zero or minimal exposure;

Minimisation: Applying mechanical controls or personal protection to reduce exposure to acceptable levels.

The workplace exposure standards in this publication should *not* be used as the determinant in deciding whether or not the conditions existing in a place of work constitute a "significant hazard". The stepwise application of the hierarchy: elimination, isolation and minimisation is to be followed for all conditions that are potentially hazardous to health.

In most situations, it would be expected that by taking reasonable steps it would be possible to achieve levels of exposure considerably below the workplace exposure standards.

An environmental and/or biological monitoring programme provides a convenient means of assessing the quality of the environment in the workplace but this is only one facet of the comprehensive approach that should be taken. Education and training, engineering control, administrative control, protective equipment and medical surveillance are all elements that should be considered in an integrated occupational health programme.

---

* The Health and Safety in Employment Act 1992 should be consulted for the definition of significant hazard.

Another caution should be sounded about the use of workplace exposure standards. For many substances, the levels of exposure that are now considered acceptable will in the future be found to be excessive. As the scientific data on the toxic effects of substances have grown, many exposure standards have been reviewed, generally being lowered not raised. It is stressed that the primary consideration should be to avoid exposure to substances that may be harmful to health and where this is not possible to reduce the exposure to the lowest practicable level. Workplace exposure monitoring or biological exposure monitoring may be used to establish that the lowest practicable level has been achieved. It is recognised that the health risks presented by occupational exposure to some substances cannot be completely eliminated, and that some residual risk will remain even after reasonable precautions have been taken.

In preventing or controlling exposure to substances that may be harmful to health, substitution with a less hazardous substance and the provision of engineering control are preferred to the use of personal protective equipment. Respirators do, however, provide a means of reducing unnecessary exposure. Their routine use should, in particular, be encouraged as a means of providing additional protection for short periods of increased exposure.

Often, factors apart from occupational exposure will contribute to the development of work-related disorders. A worker's susceptibility may be influenced by genetic factors, age, state of health, exposure outside of the workplace, smoking, and alcohol or other drug usage. Ultimately, it is the health of the individual worker that is to be protected, and we must ensure that procedures that are designed to meet the average response remain flexible.

Contents

Preface 3

Workplace Exposure Standards for Atmospheric Contaminants 7

1. Introduction 8
2. Notice of Intended Changes and Additions 10
3. Workplace Exposure Standards: Definitions 11
4. Sampling for Assessment Against the Standards 12
5. Units of Measurement 14
6. Mixed Exposures 15
7. Aerosols 17
8. Carcinogens 19
9. Skin Absorption 22
10. Work Load 23
11. Sensitisers 24
12. Simple Asphyxiants 25

Appendix 1: Inspirable and Respirable Dust 57

Appendix 2: Time-Weighted Average Calculation Guide 61

Appendix 3: Mixed Exposures 63

Appendix 4: Rubber Fume and Rubber Process Dust 64

Appendix 5: Lead Biological Exposure Indices 65

Appendix 6: Workplace Exposure Standards Proposed by Other Organisations 66

Biological Exposure Indices 71

1. Introduction 72
2. Assigned Biological Exposure Indices 73
3. Sample Collection 74
4. Reporting of Results 75
5. Interpretation of Results 76

Workplace Exposure Standards for Noise 80

Workplace Exposure Standards for Hot Environments 81

References 90

Workplace Exposure Standards for Atmospheric Contaminants

1. Introduction

The Workplace Exposure Standards set out in this section are intended to be used as guidelines for those involved in occupational health practice. The use of the standards by untrained persons as a marker in determining "compliance" is not recommended. In assigning the standards, defining a level that will achieve freedom from adverse health effects is the major consideration. Compliance with the designated value does not, however, guarantee protection from discomfort or possible ill-health outcomes for all workers. The range of individual susceptibility is wide and it is possible that workers will experience discomfort or develop occupational illness from exposure to substances at levels below the exposure standards.

The standards endorsed by the Exposure Standards Committee generally follow those set by the Australian National Occupational Health and Safety Commission (NOHSC)[3]. The majority have their origin in the Threshold Limit Values (TLVs) compiled by the American Conference of Governmental Industrial Hygienists (ACGIH)[1] but an increasing number of standards are being set by the Australian group. The scientific basis for the ACGIH TLVs is contained in the publications: ACGIH *Documentation of the Threshold Limit Values and Biological Exposure Indices*[2] and NOHSC *Documentation of the Exposure Standards* [16].

Approximately 600 substances have been assigned standards. While in many cases well-documented data exist, for some substances the toxicological and industrial hygiene information that is available does not provide the solid platform desired for standard-setting. It is inevitable that some current exposure standards will be lowered in the future. The workplace exposure standards are not to be used to differentiate between exposure levels that are safe for all workers and those that are inherently hazardous. The relationship between the numerical value of two exposure standards cannot be used as a measure of relative toxicity. Apart from any inconsistency that may have resulted from the amount of information that was available at the time the different standards were set, the biological basis for assigning the standards also varies. Some standards are designed to prevent the development of ill-health after long-term exposure; others to reduce the possibility of acute effects. Further, the technical feasibility of limiting exposure varies from substance to substance and in practice this may restrict the safety factor that can be realized.

Many substances that may be encountered in the workplace have not been assigned exposure standards. This should not be taken as an indication that these substances are safe and that no restriction need be placed on their use. Regardless of the standard, it is important to take all reasonable steps to reduce the concentration of airborne substances to the lowest practicable level.

While substances hazardous to health may enter the body following inhalation, ingestion or skin absorption, it is usually the inhalation component that is most important. Substances listed with a skin notation are known to have the potential for significant skin absorption. This should not be ignored, as the total dose received may be higher than that suggested by the airborne level. This is further discussed in the section on skin absorption.

Exposure to airborne substances is usually measured directly with personal air sampling techniques but in some situations biological monitoring may be used as a complementary approach. An introduction to biological monitoring and a list of recommended indices may be found in the second part of this publication.

2. Notice of Intended Changes and Additions

Notice of intended changes and additions to *Workplace Exposure Standards and Biological Exposure Indices* are given following the main tables. While this document on workplace exposure standards will be revised every two years, further intended changes may be published in the intervening period.

Submissions on the standards are welcomed. In making these submissions the following points should be considered.

It is anticipated that the workplace exposure standards will be able to be met in most situations by taking reasonable precautions. There may be some specific instances, however, where personal protective equipment may have to be worn in order to reduce the effective exposure to a substance to an acceptable level. Submissions on the standards, as well as addressing the scientific validity of the data in the documentation, may include comment on the feasibility of achieving a particular level with the implementation of reasonable engineering controls.

Those wishing to make submissions may obtain copies of the documentation (for specific substances) that forms the basis of the intended changes and adopted values from the Occupational Safety and Health Service of the Department of Labour. An intended change will normally be adopted after a period of two years, unless evidence comes to light that questions the appropriateness of the values.

Communications relating to workplace exposure standards should be addressed to:

The Manager Occupational Health Services
Occupational Safety and Health Service
Department of Labour
PO Box 3705
Wellington

3. Workplace Exposure Standards: Definitions

A substance encountered in the workplace may be acutely hazardous or its effects may only be noted after long-term exposure has resulted in an accumulation of the substance in the body. For substances that produce chronic effects and have long half-times in the body it is sufficient to control the mean exposure, but if acute effects are involved it is also necessary to control fluctuations in the levels by limiting short-term exposures.

The following categories of Workplace Exposure Standards are defined:

Workplace Exposure Standard - Ceiling (WES-Ceiling). *A concentration that should not be exceeded during any part of the working day.*

Workplace Exposure Standard - Time-Weighted Average (WES-TWA). *The 8-hour time-weighted average exposure standard* designed to protect the worker from the effects of long-term exposure.

Workplace Exposure Standard - Short-Term Exposure Limit (WES-STEL). *The 15-minute average exposure standard.* Applies to any 15-minute period in the working day and is designed to protect the worker against adverse effects of irritation, chronic or irreversible tissue change, or narcosis that may increase the likelihood of accidents. The WES-STEL is not an alternative to the WES-TWA; both short-term and 8-hour time-weighted average exposures should be determined.

General Excursion Limit. Often there are insufficient toxicological data available for the establishment of a STEL. Peak exposures should, however, still be controlled, even in situations where the 8-hour TWA is not exceeded. *A 15-minute exposure limit of three times the TWA is recommended.* Where a STEL has been assigned, the STEL value takes precedence over the general excursion regardless of whether or not it is a stricter standard.

Exposure limits have been derived on the premise that the working week consists of five 8-hour days. In practice, this traditional work schedule is not followed by a number of occupational groups. Various models for adjusting exposure limits to accommodate unusual work schedules have been proposed. The approach in the following section on sampling and assessment against the standards applies to all work schedules and is consistent with the OSHA model, which is one of the procedures discussed in detail by Patty[6].

4. Sampling for Assessment Against the Standards

In all instances, the standards relate to exposure that has been determined by personal monitoring.

The standard assigned for substances that may be present in the workplace air as an aerosol refers to inspirable dust unless respirable is specified (inspirable and respirable dust are defined in the section on aerosols; appendix 1 contains details of sampling requirements).

When sampling for assessment against the 8-hour reference period, the total exposure occurring over the working day should be determined, but if this is not possible, sufficient samples should be taken to allow a reliable estimate of the total exposure to be made.

The procedure used for short-term sampling should be capable of measuring the average concentration that the worker is exposed to over a 15-minute reference period.

If a compound has been assigned a ceiling notation, the method used to assess exposure should ideally be capable of measuring an instantaneous peak. As real-time personal monitoring is not normally feasible, the shortest sampling period that gives the required analytical sensitivity is to be used. This time period should not be greater than 15 minutes.

The following guidelines should be applied in gathering exposure data for comparison with the standards.

A. The substance causes an acute response. *All exposures occurring over a 24-hour period are treated as if they had taken place in 8 hours*. i.e.

$$\text{TWA Exposure} = \frac{\text{Total exposure in day (concentration x time)}}{\text{8 hours}}$$

The TWA exposure figure is compared directly with the WES-TWA. If a STEL has been assigned for the substance then, in addition, a direct comparison between the average concentration found in *any* 15-minute period and the WES-STEL should be made.

B. The substance presents a long-term cumulative hazard (e.g. lead). *All exposures occurring over the week are treated as if they had taken place in 40 hours.*

$$\text{TWA Exposure} = \frac{\text{Total exposure in week (concentration x time)}}{\text{40 hours}}$$

Again, the TWA exposure figure is compared directly with the WES-TWA.

If a substance exhibits both acute and cumulative toxicity, then both the daily and weekly correction should be considered and the one that produces the most conservative figure should be used.

C. The substance has been given a ceiling value. *A direct comparison is made with the WES-Ceiling.*

Examples of the calculations that are required to convert exposure data to figures that can be compared with the standards are given in appendix 2.

Obtaining a reliable estimate of a worker's exposure to airborne contaminants often requires a considerable commitment of resources. The sampling strategy should be designed to obtain the relevant exposure information as efficiently as possible. The document *Monitoring Strategies for Toxic Substances*[7] is recommended as a suitable reference for obtaining practical guidance on sampling. Specific sampling procedures and analytical methods are contained in a number of publications[8,9].

Further advice on the application of exposure limits and monitoring techniques can be obtained from the Occupational Health Services Section of OSH.

5. Units of Measurement

The concentration of a substance in air is usually expressed in the terms parts per million (ppm) by volume, or gravimetrically as milligrams per cubic metre of air (mg/m^3).

One advantage of expressing concentrations in ppm is that temperature and pressure are taken into account, allowing a standard to be equally applicable over a range of ambient conditions. Standards for substances that normally exist in air as a gas or vapour are usually initially established in terms of ppm. The unit mg/m^3 is temperature- and pressure-dependent but it is applicable to gases, vapours, dusts and fumes.

The workplace exposure standards for gases and vapours are expressed in ppm, with the derived units mg/m^3 also being listed. In the case of particulates, the concentration is given in mg/m^3. A temperature of 25°C and a pressure of 760 torr has been used in the conversion from ppm to mg/m^3. The conversion equation is:

$$\text{WES in mg/m}^3 = \frac{\text{WES (in ppm) x gram molecular weight of the substance}}{24.45}$$

To avoid significant differences between the two sets, the derived mg/m^3 values have been rounded to two or three significant figures — no increase in the precision of the standard is implied.

6. Mixed Exposures

Generally, the exposure standards are listed for a single substance or a range of compounds with a common toxic entity (e.g. compounds of arsenic). In some instances, for practical reasons, a standard has been set for a group of substances (e.g. petrol fumes). Often a worker will be exposed to several vapours, dusts, or aerosols over the working day. Before an assessment of the existing hazard can be made, it is important to have determined the airborne concentration of each substance.

In some instances it may be possible to measure the concentration of a "marker" and use the known composition of the bulk material to estimate the remaining levels. This should only be attempted when there is good reason to believe the proportions in the workplace air will mirror those in the original substance. It would not be valid, for example, to assume that the composition of vapour coming from a material containing a mixture of solvents of different volatilities can be anticipated from the solvent concentrations in the bulk material.

INDEPENDENT EFFECTS

If there is evidence to suggest that the actions of the substances on the body are independent, the concentrations of the individual substances should be compared directly with their appropriate standards. This is most obvious when there are two different target organs. For example, the exposure limit for benzene is determined by its action on the bone marrow, therefore its effects could not be considered to be additive with those of other aromatic hydrocarbons.

ADDITIVE EFFECTS

Although it is simplistic, a pragmatic approach is to consider the effects of substances with similar toxicologic action to be additive. This may be applied, for example, to a mixture of organic solvents having like narcotic action.

If the combined WES is not to be exceeded then:

$$\frac{C_1}{WES_1} + \frac{C_2}{WES_2} + \frac{C_3}{WES_3} + \ldots \frac{C_n}{WES_n} \quad \text{should be less than 1}$$

An example is given in appendix 3.

GREATER THAN ADDITIVE EFFECTS

The combined action may be greater than that predicted from the sum of the individual responses (synergistic effect), or a substance that is not itself toxic may potentiate or enhance the effect of a toxic chemical. The fact that the present understanding of synergistic effects is far from complete emphasises the need for a prudent approach to mixed exposures. It is important that the assessment of all exposures should be made in consultation with suitably qualified and experienced persons, and this is especially so in the case of mixed exposures.

7. Aerosols

Airborne particulates, or aerosols, encountered in the workplace include dusts, fumes, and mists.

Dusts are discrete particles suspended in air, originating from the attrition of solids (primary dusts) or the stirring up of powders or other finely divided materials (secondary dusts). Dusts encountered in the workplace typically contain particles covering a wide range of sizes.

Fumes are airborne particulates with diameters generally less than 1 µm. They may be formed by both thermal mechanisms (e.g. condensation of volatilised solids, or incomplete combustion) and chemical processes (e.g. vapour phase reactions). Agglomeration of fume particles may occur, resulting in the formation of much larger particles.

Mists are droplets of liquid suspended in air. They may be formed by the condensation of a vapour, or mechanical actions such as the atomisation of liquids in spray systems.

The parameter influencing the behaviour of particles in air is the equivalent aerodynamic diameter. The aerodynamic diameter of a particle of any shape and density is defined as the diameter of a sphere with a density of 1.0 g/cm^3 which has the same terminal velocity of settling in still or laminarly flowing air as the particle in question.

Airborne particulates are associated with biological effects that can be classified as: infectious, carcinogenic, fibrogenic, systemic, allergenic, or irritative. The target organ may be within the respiratory system or, if the effect is systemic, elsewhere in the body. The concentration of the substance in air, either in terms of weight or number of particles per unit volume, is not the only factor related to the toxic potential. Particle size distribution also plays an important role as it determines the fraction of the inhaled mass that is deposited at the different sites within the respiratory system.

Three mechanisms are responsible for the deposition of particles within the airways: inertial impaction, sedimentation and diffusion.

Impaction is most effective for particles larger than 5 µm. The majority of particles in this size range are unable to negotiate passages in the nose and pharynx.

Sedimentation, the settling of particles under their own weight, is important in the small airways for particles of 1 to 5 µm.

Diffusion, or Brownian movement, results from collisions with gas molecules, and only becomes significant for particles less than approximately 0.5

μm. Diffusion is most effective in the alveoli and small airways where the distances between the walls are small.

Not all particles present in the workplace air will be taken in through the nose or mouth. Other particles are inhaled and not deposited but exhaled in the next breath. Particles in the order of 0.5 - 1.0 μm are not effectively removed by impaction, sedimentation or diffusion, and tend to be under-represented in the material deposited. Aerosols in this size range are not necessarily toxicologically insignificant, however, as the forces that influence their low efficiency of collection in the respiratory system also act against their removal from the workplace air.

The efficiency of deposition may also be influenced by other characteristics of the particles. Hygroscopic particles (e.g. sulphuric acid mist) will increase in size as they absorb water and the effective diameter may be greater than the observed. Fibres have a tendency to become aligned in the airflow and are therefore able to penetrate further into the respiratory system than would be anticipated from consideration of their mass.

Although it is possible to define mass fractions relating to various sites in the respiratory system, it is the inspirable and respirable fractions that are more commonly determined.

Inspirable dust is the portion of airborne dust that is taken in through the mouth and nose during breathing.

Respirable dust corresponds to the fraction of total inspirable dust that is able to penetrate and deposit in the lower bronchioles and alveolar region.

For the purpose of these standards, both the inspirable and respirable fractions are defined by a specified collection technique (see appendix 1). For dusts that have not been assigned a specific standard (listed as *particulates not otherwise classified* in the table of standards), and are of low toxicity, a WES-TWA of 10 mg/m^3 inspirable dust is assumed. If there is doubt about the contribution that a toxic impurity in the dust may have to the overall hazard, then additionally the levels of this impurity in air should be compared directly against the appropriate standard. For example, if the dust contains asbestos then a specific determination for asbestos fibres in air should be carried out.

8. Carcinogens

For cancers induced by exposure to chemicals, the time between the initial exposure and the diagnosis of disease is typically several years. This latency period may vary with the particular substance, the intensity and length of exposure, and the individual.

Evidence for the carcinogenicity of substances encountered in the workplace is obtained from both epidemiological and animal studies. Practical limitation, including the difficulty in obtaining reliable estimations on the nature and degree of exposure in epidemiological studies, and the long latency period of occupational cancers, have inhibited the classification of carcinogens.

The existence of exposure thresholds, defining no-effect levels, has been postulated but this cannot be confirmed from the evidence provided by epidemiology or animal studies. The risk does, however, decline with decreasing dose. Generally, a pragmatic approach has been taken in setting exposure standards for carcinogens by specifying conditions that should result in no observable increase in effects above the background level.

Two categories of carcinogens are listed:

A1 Confirmed Human Carcinogens
A2 Suspected Human Carcinogens

For some substances, where the risk posed to health by their industrial use cannot be reasonably controlled, severe restrictions should be placed on usage. The following substances come into this category:

4-Aminodiphenyl (A1)
B-Naphthylamine (A1)
Benzidine (A1)
4-Nitrodiphenyl (A1)

The following substances with an assigned carcinogen category are listed in the main WES table:

Acrylamide (A2)
Acrylonitrile (A2)
Antimony trioxide (A2)
Arsenic and soluble compounds (A1)
Asbestos (A1)
Benzene (A1)
Beryllium & compounds (A2)
1,3-Butadiene (A2)
Cadmium & compounds (A2)
Calcium chromate (A2)
Carbon tetrachloride (A2)
Chloroform (A2)

bis(Chloromethyl) ether (A1)
Chromite or processing
(Chromate) (A1)
Chromium (V1) compounds
certain water insoluble (A1)
Coal tar pitch volatiles,
as benzene solubles (A1)
1,1-Dimethylhydrazine (A2)
Dimethyl sulphate (A2)
Ethyl bromide (A2)
Ethylene oxide (A2)
Formaldehyde (A2)
Hexachlorobutadiene (A2)
Hexachloroethane ((A2)
Hydrazine (A2)
Lead chromate (A2)
Methylene chloride (A2)
4,4-methylene bis(2-chloroaniline)(A2)
4,4-Methylene dianiline (A2)
Methyl hydrazine (A2)
Methyl iodide (A2)
Nickel sulphide roasting, fume & dust (A1)
2-Nitropropane (A2)
o-Phenylenediamine (A2)
Phenylhydrazine (A2)
B- Propiolactone (A2)
Propylene imine (A2)
Strontium chromate (A2)
o-Toluidine (A2)
p-Toluidine (A2)
Triethanolamine (A2)
Vinyl bromide (A2)
Vinyl chloride (A1)
Vinyl cyclohexene dioxide (A2)
Xylidine (A2)
Zinc chromates (A1)

The following substances are suspected human carcinogens that at this stage have not been assigned a standard:

Benzo(a)pyrene (A2)
Chloromethyl methyl ether (A2)
Chrysene (A2)
3,3-dichlorobenzidine (A2)
Dimethyl carbamoyl chloride (A2)
Ethylene dibromide (A2)
Hexamethyl phosphoramide (A2)
N-Nitrosodimethylamine (A2)
N-Phenyl-beta-naphthylamine (A2)
Propane sultone (A2)
o-Tolidine (A2)

Although some priority for the recommendation of engineering controls, routine monitoring, and the use of protective equipment may be inferred from the classification and assigned value, in all cases exposure should be kept to the lowest practicable level below the exposure standard. Where technically feasible, substitution with a substance that is less hazardous is the preferred option.

9. Skin Absorption

Some substances are able to penetrate the intact skin and this may result in a higher uptake than would have been expected from inhalation only. Uptake through the skin is not usually the most significant route of absorption but there are exceptions. For example, skin contact with organophosphate pesticides is thought to account for the majority of uptake experienced when working with the products. There is also evidence that absorption of vapour through the skin may be significant for some substances[17].

As the workplace exposure standard only takes into consideration the inhalation component, care should be taken when interpreting air sampling results where there is a possibility of significant uptake through the skin. Respiratory protection may give a false sense of security. This is particularly pertinent where vapour phase skin absorption occurs, as in this case there may be no obvious contact between the skin and the substance. Biological monitoring for exposure may be a useful adjunct to air sampling in these situations.

Substances that are considered to have potential for skin absorption are identified in the list of workplace exposure standards.

10. Work Load

An increase in work load can influence the uptake of a substance by increasing the lung ventilation rate and blood flow. For gases and vapours the extent of this increase is dependent on, among other factors, the solubility of the substance in blood. If the substance is very soluble in blood, the uptake is related directly to the respiratory volume. If the substance is only slightly soluble in blood, the circulation rate becomes the determining factor and respiratory volume does not have a significant influence. Exposure standards have generally been derived assuming a moderate work load. It is a factor that should be considered, especially where both the workload and exposure are high. The following table gives lung ventilation rates at different work loads:

Assessment of Work Load	*Lung Ventilation litres/min*
Very low (resting)	6-7
Low	11-20
Moderate	20-31
High	31-43
Very high	43-56

11. Sensitisers

Exposure to some substances can lead to the development of an allergic sensitisation, usually affecting the skin or respiratory system. High exposures may hasten the onset of the allergy, but once developed in an individual, very low exposures may provoke a reaction. Even although low exposure standards have been specified for known sensitisers, the levels do not necessarily provide adequate protection for sensitised persons. Avoiding further exposure may be the only option for these individuals.

A number of substances, including formaldehyde and acid anhydrides, are known to be both respiratory and skin sensitisers while in other instances the effect is more commonly associated with a particular site. For example, toluene diisocyanate (TDI) is a recognised respiratory sensitiser but it has also been associated with skin effects; chromic acid responses are commonly associated with the skin.

12. Simple Asphyxiants

Some gases and vapours, when they are present in the air in significant concentrations, behave as asphyxiants by reducing the concentration of oxygen by dilution. The oxygen content of air should be maintained at or above 19.5% by volume under normal atmospheric pressure.

Atmospheres that are deficient in oxygen do not provide adequate sensory warning of danger and most simple asphyxiants are odourless.

Simple asphyxiants can also present an explosion hazard.

Substance	CAS # [a]	WORKPLACE EXPOSURE STANDARDS TWA ppm[b]	TWA mg/m3[c]	STEL ppm[b]	STEL mg/m3[c]
* Acetaldehyde	[75-07-0]	100	180	150	270
Note: the NZ WES is higher than exposure limits set by other authorities, see appendix 6.					
Acetic acid	[64-19-7]	10	25	15	37
* Acetic anhydride	[108-24-7]	Ceiling 5ppm (21 mg/m3)			
Acetone (1994)	[67-64-1]	500	1,185	1,000	2,375
Note: the NZ WES is higher than exposure limits set by other authorities, see appendix 6.					
* Acetone cyanohydrin (see Notice of Intended Changes and Additions)					
Acetonitrile (skin)	[75-05-8]	40	67	60	101
* Acetophenone (see Notice of Intended Changes and Additions)					
Acetylene	[74-86-2]	Simple asphyxiant-may present an explosion hazard.			
Note: the NZ WES is higher than exposure limits set by other authorities, see appendix 6.					
Acetylene dichloride (see 1,2-Dichloroethylene)					
Acetylene tetrabromide	[79-27-6]	1	14	–	–
Acetylsalicylic acid	[50-78-2]	–	5	–	–
Acrolein	[107-02-8]	0.1	0.23	–	–
Acrylamide (skin, A2)	[79-06-1]	–	0.03	–	–
Acrylic acid (skin)	[79-10-7]	2	5.9	–	–
Acrylonitrile (skin, A2)	[107-13-1]	2	4.3	–	–
* Adipic acid (see Notice of Intended Changes and Additions)					
* Adiponitrile (skin) (see Notice of Intended Changes and Additions)					
Aldrin (skin)	[309-00-2]	–	0.25	–	–
Allyl alcohol (skin)	[107-18-6]	2	4.8	4	9.5
Allyl chloride	[107-05-1]	1	3.0	2	6.0
Allyl glycidyl ether (AGE) (skin, sen)	[106-92-3]	5	23	10	47
Allyl propyl disulfide	[2179-59-1]	2	12	3	18
a-Alumina (see Aluminium oxide)					
Aluminium, as Al	[7429-90-5]				
Metal dust		–	10	–	–
Pyro powders		–	5	–	–
Welding fumes		–	5	–	–
Soluble salts		–	2	–	–
Alkyls (Not otherwise classified)		–	2	–	–
Aluminium oxide	[1344-28-1]	–	10[d]	–	–

Substance	CAS # [a]	WORKPLACE EXPOSURE STANDARDS TWA ppm[b]	TWA mg/m³[c]	STEL ppm[b]	STEL mg/m³[c]
4-Aminodiphenyl (skin, A1)	[92-67-1]	–	–	–	–
2-Aminoethanol (see Ethanolamine)					
2-Aminopyridine	[504-29-0]	0.5	2.0	–	–
3-Amino-1,2,4-triazole (see Amitrole)					
Amitrole	[61-82-5]	–	0.2	–	–
Ammonia	[7664-41-7]	25	17	35	24
Ammonium chloride fume	[12125-02-9]	–	10	–	20
* Ammonium perfluorooctanoate	[3825-26-1]	–	0.1	–	–
Ammonium sulphamate	[7773-06-0]	–	10	–	–
Amosite (see Asbestos)					
n-Amyl acetate	[628-63-7]	100	532	–	–
sec-Amyl acetate	[626-38-0]	125	665	–	–
Aniline & homologues (skin)	[62-53-3]	2	7.6	–	
Anisidine (o-, p- isomers) (skin)	[29191-52-4]	0.1	0.50	–	–
Antimony & compounds, as Sb	[7440-36-0]	–	0.5	–	–
Antimony trioxide	[1309-64-4]				
Handling & use, as Sb		–	0.5	–	–
Production (A2)		–	–	–	–
ANTU	[86-88-4]	–	0.3	–	–
Argon	[7440-37-1]	Simple asphyxiant			
* Arsenic & soluble compounds, as As (A1, bio, 1994)	[7440-38-2]	–	0.05	–	–
Note: the NZ WES is higher than exposure limits set by other authorities, see appendix 6.					
Arsine	[7784-42-1]	0.05	0.16	–	–
Asbestos[e] (NZ, A1) Actinolite Anthophyllite Chrysotile Tremolite	[12001-29-5]	(1) An average concentration over any 4-hour period of one fibre per millilitre of air; and (2) A maximum concentration over any 10-minute period of six fibres per millilitre of air.			
Amosite Crocidolite	[12172-73-5] [12001-28-4]	A concentration over any 4-hour period of 0.1 fibres per millilitre of air. The maximum allowable concentrations of asbestos are established by *Gazette* notice and are liable to alteration.			

Substance	CAS # [a]	WORKPLACE EXPOSURE STANDARDS TWA ppm[b]	TWA mg/m3[c]	STEL ppm[b]	STEL mg/m3[c]
Asphalt (petroleum) fumes	[8052-42-4]	–	5	–	–
Aspirin (see Acetylsalicylic acid)					
Atrazine	[1912-24-9]	–	5	–	–
Azinphos-methyl (skin)	[86-50-0]	–	0.2	–	–
Barium, soluble compounds, as Ba	[7440-39-3]	–	0.5	–	–
Barium sulphate	[7727-43-7]	–	10[d]	–	–
Benomyl	[17804-35-2]	0.84	10	–	–
Benzene (skin, A1, 1994)	[71-43-2]	5	16	–	–
Note: the NZ WES is higher than exposure limits set by other authorities, see appendix 6.					
Benzidine (skin, A1)	[92-87-5]	–	–	–	–
p-Benzoquinone (see Quinone)					
Benzoyl peroxide	[94-36-0]	–	5	–	–
Benzo(a)pyrene (A2)	[50-32-8]	–	–	–	–
* Benzyl acetate (see Notice of Intended Changes and Additions)					
Benzyl chloride	[100-44-7]	1	5.2	–	–
Beryllium & compounds, as Be (A2)	[7440-41-7]	–	0.002	–	–
Note: the NZ WES is higher than exposure limits set by other authorities, see appendix 6.					
Biphenyl	[92-52-4]	0.2	1.3	–	–
Bismuth telluride	[1304-82-1]	_	10		
Se-doped		–	5	–	–
Borates, tetra, sodium salts	[1303-96-4]				
Anhydrous		_	1	_	_
Decahydrate		_	5	_	_
Pentahydrate		_	1	_	_
Boron oxide	[1303-86-2]	–	10	–	–
Boron tribromide	[10294-33-4]	Ceiling 1 ppm (10 mg/m3)			
Boron trifluoride	[7637-07-2]	Ceiling 1 ppm (2.8 mg/m3)			
Bromacil	[314-40-9]	–	11	–	–
* Bromine	[7726-95-6]	0.1	0.66	–	–
Bromine pentafluoride	[7789-30-2]	0.1	0.72	–	–
Bromochloromethane (see Chlorobromomethane)					
Bromoform (skin)	[75-25-2]	0.5	5.2	–	–

Substance	CAS # [a]	WORKPLACE EXPOSURE STANDARDS TWA ppm[b]	TWA mg/m3[c]	STEL ppm[b]	STEL mg/m3[c]
* 1,3-Butadiene (A2)	[106-99-0]	10	22	–	–
Butane	[106-97-8]	800	1,900	–	–
Butanethiol (see Butyl mercaptan)					
2-Butanone (see Methyl ethyl ketone)					
2-Butoxyethanol (skin)	[111-76-2]	25	121	–	–
* n-Butyl acetate	[123-86-4]	150	713	200	950
sec-Butyl acetate	[105-46-4]	200	950	–	–
tert-Butyl acetate	[540-88-5]	200	950	–	–
Butyl acetate, all isomer Note: the NZ WES is higher than exposure limits set by other authorities, see appendix 6.					
Butyl acrylate (sen)	[141-32-2]	10	52	–	–
n-Butyl alcohol (skin)	[71-36-3]	Ceiling 50 ppm (150 mg/m3)			
sec-Butyl alcohol	[78-92-2]	100	303	–	–
* tert-Butyl alcohol	[75-65-0]	100	303	150	455
Butylamine (skin)	[109-73-9]	Ceiling 5 ppm (15 mg/m3)			
tert-Butyl chromate, as CrO3 (skin)	[1189-85-1]	Ceiling 0.1 mg/m3			
n-Butyl glycidyl ether (BGE) (sen)	[2426-08-6]	25	133	–	–
n-Butyl lactate	[138-22-7]	5	30	–	–
Butyl mercaptan	[109-79-5]	0.5	1.8	–	–
o-sec-Butylphenol (skin)	[89-72-5]	5	31	–	–
* p-tert-Butyltoluene	[98-51-1]	10	61	20	121
Cadmium & compounds, as Cd (A2, bio, 1994)	[7440-43-9]	– –	0.01 Inspirable dust 0.002 Respirable dust[h]		
Note: the NZ WES is higher than exposure limits set by other authorities, see appendix 6.					
Caesium hydroxide	[21351-79-1]	–	2	–	–
Calcium carbonate	[1317-65-3]	–	10[d]	–	–
Calcium chromate, as Cr (A2, 1994)	[13765-19-0]	–	0.001	–	–
Calcium cyanamide	[156-62-7]	–	0.5	–	–
Calcium hydroxide	[1305-62-0]	–	5	–	–
Calcium oxide	[1305-78-8]	–	2	–	–
Calcium silicate	[1344-95-2]	–	10[d]	–	–

Substance	CAS # [a]	WORKPLACE EXPOSURE STANDARDS TWA ppm[b]	TWA mg/m3[c]	STEL ppm[b]	STEL mg/m3[c]
Calcium sulphate	[7778-18-9]	–	10[d]	–	–
Camphor, synthetic	[76-22-2]	2	12	3	19
Caprolactam dust	[105-60-2]	–	1	–	3
Vapour		5	23	10	46
Captafol (skin)	[2425-06-1]	–	0.1	–	–
Captan	[133-06-2]	–	5	–	–
Carbaryl	[63-25-2]	–	5	–	–
Carbofuran	[1563-66-2]	–	0.1	–	–
Carbon black (1994)	[1333-86-4]	–	3	–	–
Carbon dioxide	[124-38-9]	5,000	9,000	30,000	54,000
Carbon disulphide (skin)	[75-15-0]	10	31	–	–
Note: the NZ WES is higher than exposure limits set by other authorities, see appendix 6.					
Carbon monoxide (bio, 1994)	[630-08-0]	25	29	–	–
Carbon tetrabromide	[558-13-4]	0.1	1.4	–	–
Carbon tetrachloride (skin, A2)	[56-23-5]	5	31	–	–
Note: the NZ WES is higher than exposure limits set by other authorities, see appendix 6.					
Carbonyl chloride (see Phosgene)					
Carbonyl fluoride	[353-50-4]	2	5.4	5	13
Catechol	[120-80-9]	5	23	–	–
Cellulose (paper fibre)	[9004-34-6]	–	10[d]	–	–
Cement (see Portland cement)					
Chlordane (skin)	[57-74-9]	–	0.5	–	–
Chlorinated camphene (skin)	[8001-35-2]	–	0.5	–	1
Chlorinated diphenyl oxide	[55720-99-5]	–	0.5	–	–
Chlorine	[7782-50-5]	0.5	1.5	1	2.9
Chlorine dioxide	[10049-04-4]	0.1	0.28	–	–
Chlorine trifluoride	[7790-91-2]	Ceiling 0.1 ppm (0.38 mg/m3)			
Chloroacetaldehyde	[107-20-0]	Ceiling 1 ppm (3.2 mg/m3)			
Chloroacetone (skin)	[78-95-5]	Ceiling 1 ppm (3.8 mg/m3)			
α-Chloroacetophenone	[532-27-4]	0.05	0.32	–	–
Chloroacetyl chloride (skin, 1994)	[79-04-9]	0.05	0.23	0.15	0.69

Substance	CAS # [a]	WORKPLACE EXPOSURE STANDARDS TWA ppm[b]	TWA mg/m3[c]	STEL ppm[b]	STEL mg/m3[c]
Chlorobenzene (1994)	[108-90-7]	10	46	–	–
o-Chlorobenzylidene malononitrile (skin)	[2698-41-1]	Ceiling 0.05 ppm (0.39 mg/m3)			
Chlorobromomethane	[74-97-5]	200	1,060	–	–
2-Chloro-1,3-butadiene (see β-Chloroprene)					
Chlorodifluoromethane	[75-45-6]	1,000	3,540	–	–
Chlorodiphenyl (42% chlorine) (skin)	[53469-21-9]	–	1	–	–
(54% chlorine) (skin)	[11097-69-1]	–	0.5	–	–
Note: the NZ WES is higher than exposure limits set by other authorities, see appendix 6.					
1-Chloro-2,3-epoxy propane (see Epichlorohydrin)					
2-Chloroethanol (see Ethylene chlorohydrin)					
Chloroethylene (see Vinyl chloride)					
Chloroform (A2)	[67-66-3]	10	49	–	–
Note: the NZ WES is higher than exposure limits set by other authorities, see appendix 6.					
bis(Chloromethyl) ether (A1)	[542-88-1]	0.001	0.0047	–	–
Chloromethyl methyl ether (A2)	[107-30-2]	–	–	–	–
1-Chloro-1-nitropropane	[600-25-9]	2	10	–	–
Chloropentafluoroethane	[76-15-3]	1,000	6,320	–	–
Chloropicrin	[76-06-2]	0.1	0.67	–	–
β-Chloroprene (skin)	[126-99-8]	10	36	–	–
2-Chloropropionic acid (skin, 1994)	[598-78-7]	0.1	0.44	–	–
o-Chlorostyrene	[2039-87-4]	50	283	75	425
o-Chlorotoluene	[95-49-8]	50	259	–	–
2-Chloro-6-(trichloromethyl) pyridine (see Nitrapyrin)					
Chlorpyrifos (skin)	[2921-88-2]	–	0.2	–	–
Chromite ore processing (Chromate), as Cr (A1)		–	0.05	–	–
Chromium metal	[7440-47-3]	–	0.5	–	–
Chromium (II) compounds, as Cr		–	0.5	–	–
Chromium (III) compounds, as Cr		–	0.5	–	–
Chromium (VI) compounds, as Cr (bio)					
Water soluble (sen)		–	0.05	–	–
* Certain water insoluble (sen, A1)		–	0.05	–	–
Note: the NZ WES is higher than exposure limits set by other authorities, see appendix 6.					

Substance	CAS # [a]	WORKPLACE EXPOSURE STANDARDS TWA ppm[b]	TWA mg/m³[c]	STEL ppm[b]	STEL mg/m³[c]
Chromyl chloride	[14977-61-8]	0.025	0.16	–	–
Chrysene (A2)	[218-01-9]	–	–	–	–
Chrysotile (see Asbestos)					
Clopidol	[2971-90-6]	–	10	–	–
Coal dust (NZ)		–	3 Respirable dust	–	–
		–	0.15 Respirable quartz	–	–
Coal tar pitch volatiles, as benzene solubles (A1)	[65996-93-2]	–	0.2	–	–
Note: the NZ WES is higher than exposure limits set by other authorities, see appendix 6.					
* Cobalt metal dust & fume, as Co (sen)	[7440-48-4]	–	0.05	–	–
Cobalt carbonyl, as Co (sen)	[10210-68-1]	–	0.1	–	–
Cobalt hydrocarbonyl, as Co (sen)	[16842-03-8]	–	0.1	–	–
Copper fume	[7440-50-8]	–	0.2	–	–
Dusts & mists, as Cu		–	1	–	–
Cotton dust, raw		–	0.2[g]	–	–
Cresol, all isomers (skin)	[1319-77-3]	5	22	–	–
Note: the NZ WES is higher than exposure limits set by other authorities, see appendix 6.					
Cristobalite (see Silica-Crystalline)					
Crocidolite (see Asbestos)					
Crotonaldehyde	[4170-30-3]	2	5.7	–	–
Crufomate	[299-86-5]	–	5	–	–
Cumene (skin)	[98-82-8]	50	246	–	–
Cyanamide	[420-04-2]	–	2	–	–
Cyanides, as CN (skin)	[151-50-8; 143-33-9]	–	5	–	–
Cyanogen	[460-19-5]	10	21	–	–
Cyanogen chloride	[506-77-4]	Ceiling 0.3 ppm (0.75 mg/m³)			
Cyclohexane	[110-82-7]	300	1,030	–	–
Cyclohexanol (skin)	[108-93-0]	50	206	–	–
Cyclohexanone (skin)	[108-94-1]	25	100	–	–
Cyclohexene	[110-83-8]	300	1,010	–	–
Cyclohexylamine	[108-91-8]	10	41	–	–
Cyclonite (skin)	[121-82-4]	–	1.5	–	–

Substance	CAS # [a]	WORKPLACE EXPOSURE STANDARDS TWA ppm[b]	TWA mg/m3[c]	STEL ppm[b]	STEL mg/m3[c]
Cyclopentadiene	[542-92-7]	75	203	–	–
Cyclopentane	[287-92-3]	600	1,720	–	–
Cyhexatin	[13121-70-5]	–	5	–	–
2,4-D	[94-75-7]	–	10	–	–
DDT (see Dichlorodiphenyltrichloroethane)					
Decaborane (skin)	[17702-41-9]	0.05	0.25	–	–
Demeton (skin)	[8065-48-3]	0.01	0.11	–	–
Diacetone alcohol	[123-42-2]	50	238	–	–
1,2-Diaminoethane (see Ethylenediamine)					
Diatomaceous earth (see Silica-Amorphous)					
Diazinon (skin)	[333-41-5]	–	0.1	–	–
Diazomethane	[334-88-3]	0.2	0.34	–	–
Diborane	[19287-45-7]	0.1	0.11	–	–
1,2-Dibromoethane (see Ethylene dibromide)					
* 2-N-Dibutylaminoethanol (skin)	[102-81-8]	2	14	–	–
Dibutyl phenyl phosphate (skin, 1994)	[2528-36-1]	0.3	3.5	–	–
Dibutyl phosphate	[107-66-4]	1	8.6	2	17
Dibutyl phthalate	[84-74-2]	–	5	–	–
Dichloroacetylene	[7572-29-4]	Ceiling 0.1 ppm (0.39 mg/m3)			
* o-Dichlorobenzene (skin)	[95-50-1]	Ceiling 50 ppm (301 mg/m3)			
* p-Dichlorobenzene	[106-46-7]	75	451	110	661
3,3-Dichlorobenzidine (skin, A2)	[91-94-1]	–	–	–	–
Dichlorodiphenyltrichloroethane	[50-29-3]	–	1	–	–
Dichlorodifluoromethane	[75-71-8]	1,000	4,950	–	–
1,3-Dichloro-5,5-dimethyl hydantoin	[118-52-5]	–	0.2	–	0.4
* 1,1-Dichloroethane	[75-34-3]	200	810	250	1,010
1,2-Dichloroethane (see Ethylene dichloride)					
1,1-Dichloroethylene (see Vinylidene chloride)					
1,2-Dichloroethylene	[540-59-0]	200	793	–	–
Dichloroethyl ether (skin)	[111-44-4]	5	29	10	58
Dichlorofluoromethane	[75-43-4]	10	42	–	–

Substance	CAS # [a]	WORKPLACE EXPOSURE STANDARDS TWA ppm[b]	TWA mg/m3[c]	STEL ppm[b]	STEL mg/m3[c]
Dichloromethane (see Methylene chloride)					
1,1-Dichloro-1-nitroethane	[594-72-9]	2	12	–	–
1,2-Dichloropropane (see Propylene dichloride)					
Dichloropropene (skin)	[542-75-6]	1	4.5	–	–
2,2-Dichloropropionic acid	[75-99-0]	1	5.8	–	–
Dichlorotetrafluoroethane	[76-14-2]	1,000	6,990	–	–
Dichlorvos (skin)	[62-73-7]	0.1	0.90	–	–
Dicrotophos (skin)	[141-66-2]	–	0.25	–	–
Dicyclopentadiene	[77-73-6]	5	27	–	–
Dicyclopentadienyl iron	[102-54-5]	–	10	–	–
Dieldrin (skin)	[60-57-1]	–	0.25	–	–
* Diethanolamine (skin)	[111-42-2]	3	13	–	–
* Diethylamine (skin)	[109-89-7]	10	30	25	75
* 2-Diethylaminoethanol (skin)	[100-37-8]	10	48	–	–
Diethylene triamine (skin)	[111-40-0]	1	4.2	–	–
Diethyl ether (see Ethyl ether)					
Di(2-ethylhexyl)phthalate (see Di-sec-octyl phthalate)					
Diethyl ketone	[96-22-0]	200	705	–	–
Diethyl phthalate	[84-66-2]	–	5	–	–
Difluorodibromomethane	[75-61-6]	100	858	–	–
Diglycidyl ether (DGE)	[2238-07-5]	0.1	0.53	–	–
Dihydroxybenzene (see Hydroquinone)					
Diisobutyl ketone	[108-83-8]	25	145	–	–
Diisopropylamine (skin)	[108-18-9]	5	21	–	–
Dimethoxymethane (see Methylal)					
Dimethyl acetamide (skin)	[127-19-5]	10	36	–	–
* Dimethylamine	[124-40-3]	10	18	–	–
Dimethylaminobenzene (see Xylidene)					
N,N-Dimethylaniline (skin)	[121-69-7]	5	25	10	50
Dimethylbenzene (see Xylene)					

		WORKPLACE EXPOSURE STANDARDS			
		TWA		STEL	
Substance	CAS # [a]	ppm[b]	mg/m3[c]	ppm[b]	mg/m3[c]
Dimethyl carbamoyl chloride (A2)	[79-44-7]	–	–	–	–
Dimethyl-1,2-dibromo-2,2-dichloroethyl phosphate (see Naled)					
* Dimethylethoxysilane (see Notice of Intended Changes and Additions)					
Dimethylformamide (skin)	[68-12-2]	10	30	–	–
2,6-Dimethyl-4-heptanone (see Diisobutyl ketone)					
1,1-Dimethylhydrazine (skin, A2, 1994)	[57-14-7]	0.01	0.025	–	–
Dimethylnitrosoamine (see N-Nitrosodimethylamine)					
Dimethylphthalate	[131-11-3]	–	5	–	–
Dimethyl sulphate (skin, A2)	[77-78-1]	0.1	0.52	–	–
Dinitolmide	[148-01-6]	–	5	–	–
Dinitrobenzene, all isomers (skin)	[528-29-0; 99-65-0; 100-25-4]	0.15	1.0	–	–
Dinitro-o-cresol (skin)	[534-52-1]	–	0.2	–	–
3,5-Dinitro-o-toluamide (see Dinitolmide)					
* Dinitrotoluene (skin)	[25321-14-6]	–	1.5	–	–
Dioxane (skin)	[123-91-1]	25	90	–	–
Dioxathion (skin)	[78-34-2]	–	0.2	–	–
Diphenyl (see Biphenyl)					
Diphenylamine	[122-39-4]	–	10	–	–
Diphenylmethane diisocyanate (see Isocyanates)					
Dipropylene glycol methyl ether (skin)	[34590-94-8]	100	606	150	909
Dipropyl ketone	[123-19-3]	50	233	–	–
Diquat	[85-00-7]	–	0.5	–	–
Di-sec-octyl phthalate	[117-81-7]	–	5	–	10
Disulfiram	[97-77-8]	–	2	–	–
Disulfoton	[298-04-4]	–	0.1	–	–
2,6-Di-tert-butyl-p-cresol	[128-37-0]	–	10	–	–
Diuron	[330-54-1]	–	10	–	–
Divinyl benzene	[1321-74-0]	10	53	–	–
Emery	[112-62-9]	–	10[d]	–	–
Endosulfan (skin)	[115-29-7]	–	0.1	–	–

Substance	CAS # [a]	WORKPLACE EXPOSURE STANDARDS TWA ppm[b]	TWA mg/m³[c]	STEL ppm[b]	STEL mg/m³[c]
Endrin (skin)	[72-20-8]	–	0.1	–	–
Enflurane	[13838-16-9]	75	566	–	–
Note: the NZ WES is higher than exposure limits set by other authorities, see appendix 6.					
Enzymes (see Subtilisins)					
* Epichlorohydrin (skin)	[106-89-8]	2	7.6	–	–
* EPN (skin)	[2104-64-5]	–	0.5	–	–
1,2-Epoxypropane (see Propylene oxide)					
2,3-Epoxy-1-propanol (see Glycidol)					
Ethane	[74-84-0]	Simple asphyxiant—may present an explosion hazard.			
Ethanethiol (see Ethyl mercaptan)					
Ethanol (see Ethyl alcohol)					
Ethanolamine	[141-43-5]	3	7.5	6	15
Ethion (skin)	[563-12-2]	–	0.4	–	–
2-Ethoxyethanol (skin)	[110-80-5]	5	18	–	–
Note: the NZ WES is higher than exposure limits set by other authorities, see appendix 6.					
2-Ethoxyethyl acetate (skin)	[111-15-9]	5	27	–	–
Note: the NZ WES is higher than exposure limits set by other authorities, see appendix 6.					
Ethyl acetate	[141-78-6]	400	1,440	–	–
Note: the NZ WES is higher than exposure limits set by other authorities, see appendix 6.					
Ethyl acrylate (sen, 1994)	[140-88-5]	Ceiling 5ppm (20mg/m³)			
Ethyl alcohol	[64-17-5]	1,000	1,880	–	–
* Ethylamine (skin)	[75-04-7]	10	18	–	–
Ethyl amyl ketone	[541-85-5]	25	131	–	–
Ethyl benzene	[100-41-4]	100	434	125	543
Ethyl bromide (skin, A2, 1994)	[74-96-4]	5	22	–	–
Ethyl butyl ketone	[106-35-4]	50	234	–	–
* Ethyl chloride	[75-00-3]	1,000	2,640	–	–
Ethylene	[74-85-1]	Simple asphyxiant			
Ethylene chlorohydrin (skin)	[107-07-3]	Ceiling 1 ppm (3.3 mg/m³)			
Ethylenediamine (skin, sen)	[107-15-3]	10	25	–	–
Ethylene dibromide (skin, A2)	[106-93-4]	–	–	–	–

Substance	CAS # [a]	WORKPLACE EXPOSURE STANDARDS TWA ppm[b]	TWA mg/m³[c]	STEL ppm[b]	STEL mg/m³[c]
Ethylene dichloride	[107-06-2]	10	40	–	–
Note: the NZ WES is higher than exposure limits set by other authorities, see appendix 6.					
Ethylene glycol vapour & mist	[107-21-1]	Ceiling 50 ppm (127 mg/m³)			
Ethylene glycol dinitrate (skin, 1994)	[628-96-6]	0.05	0.31	–	–
Ethylene glycol methyl ether acetate (see 2-Methoxyethyl acetate)					
Ethylene oxide (A2)	[75-21-8]	1	1.8	–	–
Ethylenimine (skin)	[151-56-4]	0.5	0.88	–	–
Ethyl ether	[60-29-7]	400	1,210	500	1,520
Ethyl formate	[109-94-4]	100	303	–	–
Ethylidene chloride (see 1,1-Dichloroethane)					
Ethylidene norbornene	[16219-75-3]	Ceiling 5 ppm (25 mg/m³)			
Ethyl mercaptan	[75-08-1]	0.5	1.3	–	–
N-Ethylmorpholine (skin)	[100-74-3]	5	24	–	–
Ethyl silicate	[78-10-4]	10	85	–	–
Fenamiphos (skin)	[22224-92-6]	–	0.1	–	–
Fensulfothion	[115-90-2]	–	0.1	–	–
Fenthion (skin)	[55-38-9]	–	0.2	–	–
Ferbam	[14484-64-1]	–	10	–	–
Ferrovanadium dust	[12604-58-9]	–	1	–	–
Fibrous glass dust (see Synthetic mineral fibres)					
Fluorides, as F (bio)		–	2.5	–	–
Fluorine	[7782-41-4]	1	1.6	2	3.1
Note: the NZ WES is higher than exposure limits set by other authorities, see appendix 6.					
Fluorotrichloromethane (see Trichlorofluoromethane)					
Fonofos (skin)	[944-22-9]	–	0.1	–	–
Formaldehyde (sen, NZ, A2, 1994)	[50-00-0]	Ceiling 1ppm (1.2 mg/m³)			
Note: the NZ WES is higher than exposure limits set by other authorities, see appendix 6.					
Formamide (skin)	[75-12-7]	10	18	–	–
Formic acid (1994)	[64-18-6]	5	9.4	10	19
Furfural (skin)	[98-01-1]	2	7.9	–	–
Furfuryl alcohol (skin)	[98-00-0]	10	40	15	60

Substance	CAS # [a]	WORKPLACE EXPOSURE STANDARDS TWA ppm[b]	TWA mg/m³[c]	STEL ppm[b]	STEL mg/m³[c]
Gasoline (see Petrol)					
Germanium tetrahydride	[7782-65-2]	0.2	0.63	–	–
Glass, fibrous or dust (see Synthetic mineral fibres)					
Glutaraldehyde (sen)	[111-30-8]	Ceiling 0.2 ppm (0.82 mg/m³)			
Glycerin mist	[56-81-5]	–	10[d]	–	–
Glycidol	[556-52-5]	25	76	–	–
Glycol monoethyl ether (see 2-Ethoxyethanol)					
Grain dust (oat, wheat, barley)		–	4	–	–
Graphite, all forms except graphite fibres (1994)	[7782-42-5]	–	3 Respirable dust[h] containing < 1% free silica		
Gypsum (see Calcium sulphate)					
Hafnium	[7440-58-6]	–	0.5	–	–
Halothane	[151-67-7]	50	404	–	–
Note: the NZ WES is higher than exposure limits set by other authorities, see appendix 6.					
Helium	[7440-59-7]	Simple asphyxiant.			
* Heptachlor (skin)	[76-44-8]	–	0.5	–	–
Heptane (n-Heptane)	[142-82-5]	400	1,640	500	2,050
Note: the NZ WES is higher than exposure limits set by other authorities, see appendix 6.					
2-Heptanone (see Methyl n-amyl ketone)					
3-Heptanone (see Ethyl butyl ketone)					
* Hexachlorobenzene (see Notice of Intended Changes and Additions).					
Hexachlorobutadiene (skin, A2)	[87-68-3]	0.02	0.21	–	–
Hexachlorocyclopentadiene	[77-47-4]	0.01	0.11	–	–
Hexachloroethane (skin, A2, 1994)	[67-72-1]	1	9.7	–	–
Hexachloronaphthalene (skin)	[1335-87-1]	–	0.2	–	–
Hexafluoroacetone (skin)	[684-16-2]	0.1	0.68	–	–
Hexamethylene diisocyanate (see Isocyanates)					
Hexamethyl phosphoramide (skin, A2)	[680-31-9]	–	–	–	–
Hexane (n-Hexane)	[110-54-3]	50	176	–	–
Other isomers		500	1,760	1,000	3,500
Note: the NZ WES is higher than exposure limits set by other authorities, see appendix 6.					

Substance	CAS # [a]	WORKPLACE EXPOSURE STANDARDS TWA ppm[b]	TWA mg/m³[c]	STEL ppm[b]	STEL mg/m³[c]
* 1,6 Hexanediamine (see Notice of Intended Changes and Additions).					
2-Hexanone (see Methyl n-butyl ketone)					
Hexone (see Methyl isobutyl ketone)					
sec-Hexyl acetate	[108-84-9]	50	295	–	–
Hexylene glycol	[107-41-5]	Ceiling 25 ppm (121 mg/m³)			
* Hydrazine (skin, A2)	[302-01-2]	0.1	0.13	–	–
Hydrogen	[1333-74-0]	Simple asphyxiant, may present an explosion hazard.			
Hydrogenated terphenyls	[61788-32-7]	0.5	4.9	–	–
Hydrogen bromide	[10035-10-6]	Ceiling 3 ppm (9.9 mg/m³)			
Hydrogen chloride	[7647-01-0]	Ceiling 5 ppm (7.5 mg/m³)			
* Hydrogen cyanide (skin)	[74-90-8]	Ceiling 10 ppm (11 mg/m³)			
Hydrogen fluoride, as F	[7664-39-3]	Ceiling 3 ppm (2.6 mg/m³)			
Hydrogen peroxide	[7722-84-1]	1	1.4	–	–
Hydrogen selenide, as Se	[7783-07-5]	0.05	0.16	–	–
Hydrogen sulphide	[7783-06-4]	10	14	15	21
Hydroquinone	[123-31-9]	–	2	–	–
4-Hydroxy-4-methyl-2-pentanone (see Diacetone alcohol)					
2-Hydroxypropyl acrylate (skin)	[999-61-1]	0.5	2.8	–	–
Indene	[95-13-6]	10	48	–	–
Indium & compounds, as In	[7440-74-6]	–	0.1	–	–
Iodine	[7553-56-2]	Ceiling 0.1 ppm (1 mg/m³)			
Iodoform	[75-47-8]	0.6	10	–	–
Iron oxide dust and fume (Fe_2O_3), as Fe	[1309-37-1]	–	5[i]	–	–
Iron pentacarbonyl, as Fe	[13463-40-6]	0.1	0.23	0.2	0.45
Iron salts, soluble, as Fe		–	1	–	–
Isoamyl acetate	[123-92-2]	100	532	–	–
Isoamyl alcohol	[123-51-3]	100	361	125	452
Isobutyl acetate	[110-19-0]	150	713	–	–
Isobutyl alcohol	[78-83-1]	50	152	–	–

Substance	CAS # [a]	WORKPLACE EXPOSURE STANDARDS TWA ppm[b]	TWA mg/m3[c]	STEL ppm[b]	STEL mg/m3[c]
Isocyanates, all, (as -NCO) (sen, NZ)		–	0.02	–	0.07
Note: These values apply to all isocyanates, including prepolymers, present in the workplace air as vapours, mist or dust.					
Isooctyl alcohol (skin)	[26952-21-6]	50	266	–	–
Isophorone	[78-59-1]		Ceiling 5 ppm (28 mg/m3)		
Isophorone diisocyanate (skin) (see Isocyanates)					
Isopropoxyethanol	[109-59-1]	25	106	–	–
Isopropyl acetate	[108-21-4]	250	1,040	310	1,290
Isopropyl alcohol	[67-63-0]	400	983	500	1,230
Note: the NZ WES is higher than exposure limits set by other authorities, see appendix 6.					
Isopropylamine	[75-31-0]	5	12	10	24
N-Isopropylaniline (skin)	[768-52-5]	2	11	–	–
Isopropyl ether	[108-20-3]	250	1,040	310	1,300
Isopropyl glycidyl ether (IGE)	[4016-14-2]	50	238	75	356
* Kaolin	[1332-58-7]	–	10[d]	–	–
Ketene	[463-51-4]	0.5	0.86	–	–
* Lead, inorganic dusts & fumes, as Pb (bio, NZ)	[7439-92-1]	–	0.1	–	–
Lead arsenate, as $Pb_3(AsO_4)_2$	[10102-48-4]	–	0.15	–	–
* Lead chromate, as Cr (A2)	[7758-97-6]	–	0.05	–	–
Limestone (see Calcium carbonate)					
Lindane (skin)	[58-89-9]	–	0.5	–	–
Lithium hydride	[7580-67-8]	–	0.025	–	–
LPG (Liquefied petroleum gas)	[68476-85-7]	1,000	1,800	–	–
Magnesite	[546-93-0]	–	10[d]	–	–
Magnesium oxide fume	[1309-48-4]	–	10	–	–
Malathion (skin)	[121-75-5]	–	10	–	–
Maleic anhydride (sen)	[108-31-6]	0.25	1.0	–	–
Man-made mineral fibres (see Synthetic mineral fibres)					
* Manganese dust & compounds, as Mn	[7439-96-5]	–	5	–	–
Fume, as Mn	[7439-96-5]	–	1	–	–
Note: the NZ WES is higher than exposure limits set by other authorities, see appendix 6.					

Substance	CAS # [a]	WORKPLACE EXPOSURE STANDARDS TWA ppm[b]	TWA mg/m3[c]	STEL ppm[b]	STEL mg/m3[c]
Manganese cyclopentadienyl tricarbonyl, as Mn (skin)	[12079-65-1]	–	0.1	–	–
Marble (see Calcium carbonate)					
MDI (see Isocyanates)					
MEK (see Methyl ethyl ketone)					
* Mercury vapour, as Hg (skin, bio)	[7439-97-6]	–	0.05	–	–
Alkyl compounds		–	0.01	–	–
Aryl & inorganic compounds		–	0.1	–	–
Mesityl oxide	[141-79-7]	15	60	25	100
Methacrylic acid	[79-41-4]	20	70	–	–
Methane	[74-82-8]	Simple asphyxiant—may present an explosion hazard.			
Methanethiol (see Methyl mercaptan)					
Methanol (see Methyl alcohol)					
Methomyl	[16752-77-5]	–	2.5	–	–
Methoxychlor	[72-43-5]	–	10	–	–
2-Methoxyethanol (skin)	[109-86-4]	5	16	–	–
Note: the NZ WES is higher than exposure limits set by other authorities, see appendix 6.					
2-Methoxyethyl acetate (skin)	[110-49-6]	5	24	–	–
Note: the NZ WES is higher than exposure limits set by other authorities, see appendix 6.					
4-Methoxyphenol	[150-76-5]	–	5	–	–
Methyl acetate	[79-20-9]	200	606	250	757
Methyl acetylene	[74-99-7]	1,000	1,640	–	–
Methyl acetylene-propadiene mixture (MAPP)		1,000	1,640	1,250	2,050
Methyl acrylate (skin, sen)	[96-33-3]	10	35	–	–
Methylacrylonitrile (skin)	[126-98-7]	1	2.7	–	–
Methylal	[109-87-5]	1,000	3,110	–	–
Methyl alcohol (skin)	[67-56-1]	200	262	250	328
* Methylamine	[74-89-5]	10	13	–	–
Methyl amyl alcohol (see Methyl isobutyl carbinol)					
Methyl n-amyl ketone	[110-43-0]	50	233	–	–
N-Methyl aniline (skin)	[100-61-8]	0.5	2.2	–	–
Methyl bromide (skin, bio)	[74-83-9]	5	19	–	–

Substance	CAS # [a]	WORKPLACE EXPOSURE STANDARDS TWA ppm[b]	TWA mg/m³[c]	STEL ppm[b]	STEL mg/m³[c]
Methyl n-butyl ketone (skin)	[591-78-6]	5	20	–	–
Note: the NZ WES is higher than exposure limits set by other authorities, see appendix 6.					
Methyl chloride (skin)	[74-87-3]	50	103	100	207
Methyl chloroform (1994)	[71-55-6]	125	680	–	–
Note: the NZ WES is higher than exposure limits set by other authorities, see appendix 6.					
Methyl 2-cyanoacrylate	[137-05-3]	2	9.1	4	18
Methylcyclohexane	[108-87-2]	400	1,610	–	–
Methylcyclohexanol	[25639-42-3]	50	234	–	–
o-Methylcyclohexanone (skin)	[583-60-8]	50	229	75	344
2-Methylcyclopentadienyl manganese tricarbonyl, as Mn (skin)	[12108-13-3]	–	0.2	–	–
Methyl demeton (skin)	[8022-00-2]	–	0.5	–	–
Methylene bisphenyl isocyanate (see Isocyanates)					
Methylene chloride (A2)	[75-09-2]	50	174	–	–
* 4,4-Methylene bis (2-chloroaniline) (skin, A2	[101-14-4]	0.02	0.22	–	–
Note: the NZ WES is higher than exposure limits set by other authorities, see appendix 6.					
Methylene bis(4-cyclohexylisocyanate) (see Isocyanates)					
4,4-Methylene dianiline (skin, A2)	[101-77-9]	0.1	0.81	–	–
Methyl ethyl ketone (1994)	[78-93-3]	150	445	300	890
Methyl ethyl ketone peroxide	[1338-23-4]	Ceiling 0.2 ppm (1.5 mg/m³)			
Methyl formate	[107-31-3]	100	246	150	368
5-Methyl-3-heptanone (see Ethyl amyl ketone)					
* Methyl hydrazine (skin, A2)	[60-34-4]	Ceiling 0.2 ppm (0.38 mg/m³)			
Methyl iodide (skin, A2)	[74-88-4]	2	12	–	–
Methyl isoamyl ketone	[110-12-3]	50	234	–	–
Methyl isobutyl carbinol (skin)	[108-11-2]	25	104	40	167
Methyl isobutyl ketone	[108-10-1]	50	205	75	307
Note: the NZ WES is higher than exposure limits set by other authorities, see appendix 6.					
Methyl isocyanate (skin)	[624-83-9]	0.02	0.047	–	–
Methyl isopropyl ketone	[563-80-4]	200	705	–	–
Methyl mercaptan	[74-93-1]	0.5	0.98	–	–
Methyl methacrylate (skin, sen)	[80-62-6]	100	410	–	–

Substance	CAS # [a]	WORKPLACE EXPOSURE STANDARDS TWA ppm[b]	TWA mg/m³[c]	STEL ppm[b]	STEL mg/m³[c]
Methyl parathion (skin)	[298-00-0]	–	0.2	–	–
Methyl propyl ketone	[107-87-9]	200	705	250	881
Methyl silicate	[681-84-5]	1	6	–	–
α-Methyl styrene	[98-83-9]	50	242	100	483
* Methyl-tert butyl ether (see Notice of Intended Changes and Additions).					
Metribuzin	[21087-64-9]	–	5	–	–
Mevinphos (skin)	[7786-34-7]	0.01	0.092	–	–
Mica	[12001-25-2]	–	3 Respirable dust[h]		
Mineral wool fibre (see Synthetic mineral fibre)					
MOCA (see 4,4-Methylene bis(2-chloroaniline))					
Molybdenum, as Mo	[7439-98-7]				
Soluble compounds		–	5	–	–
Insoluble compounds		–	10	–	–
Monochlorobenzene (see Chlorobenzene)					
Monocrotophos (skin)	[6923-22-4]	–	0.25	–	–
Morpholine (skin, 1994)	[110-91-8]	20	71	–	–
Naled (skin)	[300-76-5]	–	3	–	–
Naphthalene	[91-20-3]	10	52	15	79
β-Naphthylamine (A1)	[91-59-8]	–	–	–	–
Neon	[7440-01-9]	Simple asphyxiant			
* Nickel metal (sen)	[7440-02-0]	–	1	–	–
Soluble compounds, as Ni (sen)		–	0.1	–	–
* Nickel carbonyl, as Ni	[13463-39-3]	0.05	0.12	–	–
* Nickel sulphide roasting, fume & dust, as Ni (sen, A1)		–	1	–	–
Nicotine (skin)	[54-11-5]	–	0.5	–	–
Nitrapyrin	[1929-82-4]	–	10	–	20
Nitric acid	[7697-37-2]	2	5.2	4	10
Nitric oxide	[10102-43-9]	25	31	–	–
p-Nitroaniline (skin)	[100-01-6]	–	3	–	–
Nitrobenzene (skin)	[98-95-3]	1	5	–	–
p-Nitrochlorobenzene (skin)	[100-00-5]	0.1	0.64	–	–
4-Nitrodiphenyl (skin, A1)	[92-93-3]	–	–	–	–

Substance	CAS # [a]	WORKPLACE EXPOSURE STANDARDS TWA ppm[b]	TWA mg/m3[c]	STEL ppm[b]	STEL mg/m3[c]
Nitroethane	[79-24-3]	100	307	–	–
Nitrogen	[7727-37-9]	Simple asphyxiant			
Nitrogen dioxide	[10102-44-0]	3	5.6	5	9.4
Note: the NZ WES is higher than exposure limits set by other authorities, see appendix 6.					
Nitrogen trifluoride	[7783-54-2]	10	29	–	–
Nitroglycerin (NG) (skin, 1994)	[55-63-0]	0.05	0.46	–	–
* Nitromethane	[75-52-5]	100	250	–	–
1-Nitropropane	[108-03-2]	25	91	–	–
2-Nitropropane (A2)	[79-46-9]	10	36	–	–
N-Nitrosodimethylamine (skin, A2)	[62-75-9]	–	–	–	–
Nitrotoluene (skin)	[88-72-2; 99-08-1; 99-99-0]	2	11	–	–
Nitrotrichloromethane (see Chloropicrin)					
Nitrous oxide	[10024-97-2]	50	90	–	–
Note: the NZ WES is higher than exposure limits set by other authorities, see appendix 6.					
Nonane	[111-84-2]	200	1,050	–	–
Nuisance particulates (see Particulates not otherwise classified)					
Octachloronaphthalene (skin)	[2234-13-1]	–	0.1	–	–
Octane	[111-65-9]	300	1,400	375	1,750
* Oil mist, mineral	[8012-95-1]	–	5[j]	–	10
Osmium tetroxide, as Os	[20816-12-0]	0.0002	0.0016	–	–
Oxalic acid	[144-62-7]	–	1	–	2
Oxygen difluoride	[7783-41-7]	Ceiling 0.05 ppm (0.11 mg/m3)			
Ozone	[10028-15-6]	Ceiling 0.1 ppm (0.20 mg/m3)			
Paraffin wax fume	[8002-74-2]	–	2	–	–
Paraquat	[4685-14-7]	–	0.1 Respirable [h]	–	–
Parathion (skin)	[56-38-2]	–	0.1	–	–
Particulate polycyclic aromatic hydrocarbons (see Coal tar pitch volatiles)					
Particulates not otherwise classified		–	10[d]	–	–
PCB (see Chlorodiphenyl 42% & 54% chlorine)					
Pentaborane	[19624-22-7]	0.005	0.013	–	–
Pentachloronaphthalene	[1321-64-8]	–	0.5	–	–

Substance	CAS # [a]	WORKPLACE EXPOSURE STANDARDS TWA ppm[b]	TWA mg/m³[c]	STEL ppm[b]	STEL mg/m³[c]
Pentachloronitrobenzene (1994)	[82-68-8]	–	0.5	–	–
Pentachlorophenol (skin, bio)	[87-86-5]	–	0.5	–	–
Pentaerythritol	[115-77-5]	–	10	–	–
Pentane	[109-66-0]	600	1,770	750	2,210
2-Pentanone (see Methyl propyl ketone)					
* Perchloroethylene (1994)	[127-18-4]	50	335	150	1005
Note: the NZ WES is higher than exposure limits set by other authorities see appendix 6.					
Perchloromethyl mercaptan	[594-42-3]	0.1	0.76	–	–
Perchloryl fluoride	[7616-94-6]	3	13	6	25
Precipitated silica (see Silica-Amorphous)					
Perfluoroisobutylene (1994)	[382-21-8]	Ceiling 0.01 ppm (0.082 mg/m³)			
Perlite	[93763-70-3]	–	10[d]	–	–
Petrol (Gasoline)	[8006-61-9]	300	890	500	1,480
Phenacyl chloride (see a-Chloroacetophenone)					
Phenol (skin)	[108-95-2]	5	19	–	–
Phenothiazine (skin)	[92-84-2]	–	5	–	–
N-Phenyl-beta-naphthylamine (A2)	[135-88-6]	–	–	–	–
m-Phenylenediamine (1994)	[108-45-2]	–	0.1	–	–
o-Phenylenediamine (A2, 1994)	[95-54-5]	–	0.1	–	–
p-Phenylenediamine (skin)	[106-50-3]	–	0.1	–	–
Phenyl ether vapour	[101-84-8]	1	7	2	14
Phenylethylene (see Styrene, monomer)					
* Phenyl glycidyl ether (PGE) (sen, skin)	[122-60-1]	1	6.1	–	–
Phenylhydrazine (skin, sen, A2, 1994)	[100-63-0]	0.1	0.44	–	–
Phenyl mercaptan	[108-98-5]	0.5	2.3	–	–
Phenylphosphine	[638-21-1]	Ceiling 0.05 ppm (0.23 mg/m³)			
Phorate (skin)	[298-02-2]	–	0.05	–	0.2
Phosdrin (see Mevinphos)					
Phosgene	[75-44-5]	0.1	0.40	–	–
Phosphine	[7803-51-2]	0.3	0.42	1	1.4
Phosphoric acid	[7664-38-2]	–	1	–	–
Phosphorus (yellow)	[7723-14-0]	–	0.1	–	–

Substance	CAS # [a]	WORKPLACE EXPOSURE STANDARDS TWA ppm[b]	TWA mg/m³[c]	STEL ppm[b]	STEL mg/m³[c]
Phosphorus oxychloride	[10025-87-3]	0.1	0.63	–	–
Phosphorus pentachloride	[10026-13-8]	0.1	0.85	–	–
Phosphorus pentasulphide	[1314-80-3]	–	1	–	–
Phosphorus trichloride	[7719-12-2]	0.2	1.1	0.5	2.8
Phthalic anhydride (sen)	[85-44-9]	1	6.1	–	–
m-Phthalodinitrile	[626-17-5]	–	5	–	–
Picloram	[1918-02-1]	–	10	–	–
Picric acid	[88-89-1]	–	0.1	–	–
Pindone	[83-26-1]	–	0.1	–	–
Piperazine dihydrochloride	[142-64-3]	–	5	–	–
2-Pivalyl-1,3-indandione (see Pindone)					
Plaster of Paris (see Calcium sulphate)					
Platinum metal	[7440-06-4]	–	1	–	–
Soluble salts, as Pt (sen)		–	0.002	–	–
Polychlorobiphenyls (see Chlorodiphenyls)					
Polytetrafluoroethylene decomposition products			–	–[k]	–
Portland cement	[65997-15-1]	–	10[d]	–	–
Potassium hydroxide	[1310-58-3]	Ceiling 2 mg/m³			
PPAH (see Coal tar pitch volatiles)					
Propane	[74-98-6]	Simple asphyxiant—may present an explosion hazard.			
Note: the NZ WES is higher than exposure limits set by other authorities, see appendix 6.					
Propane sultone (A2)	[1120-71-4]	–	–	–	–
Propargyl alcohol (skin)	[107-19-7]	1	2.3	–	–
β-Propiolactone (A2)	[57-57-8]	0.5	1.5	–	–
Propionic acid	[79-09-4]	10	30	–	–
Propoxur	[114-26-1]	–	0.5	–	–
n-Propyl acetate	[109-60-4]	200	835	250	1,040
Propyl alcohol (skin)	[71-23-8]	200	492	250	614
Propylene	[115-07-1]	Simple asphyxiant—may present an explosion hazard.			
Propylene dichloride	[78-87-5]	75	347	110	508

Substance	CAS # [a]	WORKPLACE EXPOSURE STANDARDS TWA ppm[b]	TWA mg/m3[c]	STEL ppm[b]	STEL mg/m3[c]
Propylene glycol dinitrate (skin)	[6423-43-4]	0.05	0.34	–	–
Propylene glycol monomethyl ether	[107-98-2]	100	369	150	553
Propylene imine (skin, A2)	[75-55-8]	2	4.7	–	–
Propylene oxide	[75-56-9]	20	48	–	–
n-Propyl nitrate	[627-13-4]	25	107	40	172
Propyne (see Methyl acetylene)					
Pyrethrum (sen)	[8003-34-7]	–	5	–	–
Pyridine	[110-86-1]	5	16	–	–
Pyrocatechol (see Catechol)					
Quartz (see Silica-Crystalline)					
Quinone	[106-51-4]	0.1	0.44	–	–
RDX (see Cyclonite)					
Resorcinol	[108-46-3]	10	45	20	90
Rhodium metal	[7440-16-6]	–	1	–	–
Insoluble compounds, as Rh		–	1	–	–
Soluble compounds, as Rh		–	0.01	–	–
Ronnel	[299-84-3]	–	10	–	–
* Rosin core solder pyrolysis products, as formaldehyde		–	0.1	–	–
Rotenone (commercial)	[83-79-4]	–	5	–	–
Rouge		–	10[d]	–	–
Rubber					
process dust (1994)		8 (see appendix 4).			
fume (1994)		0.6 (see appendix 4).			
Rubber solvent (Naphtha)		400	1,600	–	–
Note: the NZ WES is higher than exposure limits set by other authorities, see appendix 6.					
Selenium & compounds, as Se (bio)	[7782-49-2]	–	0.2	–	–
Selenium hexafluoride, as Se	[7783-79-1]	0.05	0.2	–	–
Sesone	[136-78-7]	–	10	–	–
Silane (see Silicon tetrahydride)					
Silica-Amorphous					
Diatomaceous earth (uncalcined)	[68855-54-9]	–	10[d]	–	–
Precipitated silica		–	10[d]	–	–
Silica gel		–	10[d]	–	–

Substance	CAS # [a]	WORKPLACE EXPOSURE STANDARDS TWA ppm[b]	TWA mg/m3[c]	STEL ppm[b]	STEL mg/m3[c]
Silica-Crystalline (NZ)					
Cristobalite	[14464-46-1]	0.1 Respirable dust[h]			
Quartz	[14808-60-7]	0.2 Respirable dust[h]			
Silica fused	[60676-86-0]	0.2 Inspirable dust			
Tridymite	[15468-32-3]	0.1 Respirable dust[h]			
Tripoli	[1317-95-9]	0.2 Respirable dust[h] of contained respirable quartz			
* Silica fume (see Notice of Intended Changes and Additions).					
Silica fused (see Silica-Crystalline)					
Silica gel (see Silica-Amorphous)					
Silicon	[7440-21-3]	–	10[d]	–	–
Silicon carbide	[409-21-2]	–	10[d]	–	–
Silicon tetrahydride	[7803-62-5]	5	6.6	–	–
Silver metal	[7440-22-4]	–	0.1	–	–
Soluble compounds, as Ag		–	0.01	–	–
Soapstone		–	3 Respirable dust[h]		
		–	6 Inspirable dust		
Sodium azide	[26628-22-8]	Ceiling 0.11 ppm (0.29 mg/m3)			
Sodium bisulphite	[7631-90-5]	–	5	–	–
Sodium 2,4-dichloro-phenoxyethyl sulphate (see Sesone)					
Sodium fluoroacetate (skin)	[62-74-8]	–	0.05	–	–
Sodium hydroxide	[1310-73-2]	Ceiling 2 mg/m3			
Sodium metabisulphite	[7681-57-4]	–	5	–	–
Starch	[9005-25-8]	–	10[d]	–	–
Stearates		–	10[d,l]	–	–
Stibine	[7803-52-3]	0.1	0.51	–	–
Stoddard solvent (see White spirits)					
Strontium chromate, as Cr (A2, 1994)	[7789-06-2]	–	0.001	–	–
Strychnine	[57-24-9]	–	0.15	–	–
Styrene, monomer (skin)	[100-42-5]	50	213	100	426
Subtilisins (Proteolytic enzymes, as 100% pure crystalline enzyme) (sen)	[1395-21-7; 9014-01-1]	Ceiling 0.00006 mg/m3			
Sucrose	[57-50-1]	–	10[d]	–	–
* Sulfometuron methyl (see Notice of Intended Changes and Additions)					

Substance	CAS # [a]	WORKPLACE EXPOSURE STANDARDS TWA ppm[b]	TWA mg/m³[c]	STEL ppm[b]	STEL mg/m³[c]
Sulfotep (skin)	[3689-24-5]	–	0.2	–	–
Sulphur dioxide	[7446-09-5]	2	5.2	5	13
Sulphur hexafluoride	[2551-62-4]	1,000	5,970	–	–
Sulphuric acid	[7664-93-9]	–	1	–	–
Sulphur monochloride	[10025-67-9]	Ceiling 1 ppm (5.5 mg/m³)			
Sulphur pentafluoride	[5714-22-7]	Ceiling 0.01 ppm (0.10 mg/m³)			
Sulphur tetrafluoride	[7783-60-0]	Ceiling 0.1 ppm (0.44 mg/m³)			
Sulphuryl fluoride	[2699-79-8]	5	21	10	42
Sulprofos	[35400-43-2]	–	1	–	–
Synthetic mineral fibres (NZ)		1 Respirable fibre per millilitre air and 5 mg/m³ Inspirable dust			
Systox (see Demeton)					
2,4,5-T	[93-76-5]	–	10	–	–
Talc (containing no asbestos fibres)	[14807-96-6]	–	2 Respirable dust[h]		
Talc (containing asbestos fibres)		Use asbestos standards			
Tantalum metal	[7440-25-7]	–	5	–	–
Oxide dusts	[1314-61-0]	–	5	–	–
TDI (see Isocyanates)					
TEDP (see Sulfotep)					
Tellurium & compounds, as Te	[13494-80-9]	–	0.1	–	–
Tellurium hexafluoride, as Te	[7783-80-4]	0.02	0.10	–	–
Temephos	[3383-96-8]	–	10	–	–
TEPP (skin)	[107-49-3]	0.004	0.047	–	–
* Terephthalic acid (see Notice of Intended Changes and Additions)					
Terphenyls	[26140-60-3]	Ceiling 0.5 ppm (4.7 mg/m³)			
1,1,1,2-Tetrachloro-2,2-difluoroethane	[76-11-9]	500	4,170	–	–
1,1,2,2-Tetrachloro-1,2-difluoroethane	[76-12-0]	500	4,170	–	–
1,1,2,2-Tetrachloroethane (skin)	[79-34-5]	1	6.9	–	–
Tetrachloroethylene (see Perchloroethylene)					
Tetrachloromethane (see Carbon tetrachloride)					
Tetrachloronaphthalene	[1335-88-2]	–	2	–	–

Substance	CAS # [a]	WORKPLACE EXPOSURE STANDARDS TWA ppm[b]	TWA mg/m³[c]	STEL ppm[b]	STEL mg/m³[c]
Tetraethyl lead, as Pb (skin)	[78-00-2]	–	0.1[m]	–	–
Note: the NZ WES is higher than exposure limits set by other authorities, see appendix 6					
* Tetrahydrofuran (skin)	[109-99-9]	200	590	250	737
Tetramethyl lead, as Pb (skin)	[75-74-1]	–	0.15[m]	–	–
Note: the NZ WES is higher than exposure limits set by other authorities, see appendix 6					
Tetramethyl succinonitrile (skin)	[3333-52-6]	0.5	2.8	–	–
Tetranitromethane	[509-14-8]	1	8	–	–
Tetrasodium pyrophosphate	[7722-88-5]	–	5	–	–
Tetryl (sen)	[479-45-8]	–	1.5	–	–
Thallium soluble compounds, as Tl (skin)	[7440-28-0]	–	0.1	–	–
4,4'-Thiobis(6-tert-butyl-m-cresol)	[96-69-5]	–	10	–	–
Thioglycolic acid (skin)	[68-11-1]	1	3.8	–	–
Thionyl chloride	[7719-09-7]	Ceiling 1 ppm (4.9 mg/m³)			
Thiram	[137-26-8]	–	1	–	–
Tin metal	[7440-31-5]	–	2	–	–
Oxide & inorganic compounds, except SnH_4, as Sn		–	2	–	–
* Organic compounds, as Sn (skin, 1994)		–	0.1	–	0.2
Titanium dioxide	[13463-67-7]	–	10[d]	–	–
TNT (see 2,4,6-Trinitrotoluene)					
o-Tolidine (skin, A2)	[119-93-7]	–	–	–	–
Toluene (skin, 1994)	[108-88-3]	50	188	–	–
Toluene-2,4-diisocyanate (see Isocyanates)					
o-Toluidine (skin, A2)	[95-53-4]	2	8.8	–	–
m-Toluidine (skin)	[108-44-1]	2	8.8	–	–
p-Toluidine (skin, A2)	[106-49-0]	2	8.8	–	–
Toluol (see Toluene)					
Toxaphene (see Chlorinated camphene)					
Tributyl phosphate	[126-73-8]	0.2	2.2	–	–
Trichloroacetic acid	[76-03-9]	1	6.7	–	–
1,2,4-Trichlorobenzene	[120-82-1]	Ceiling 5 ppm (37 mg/m³)			
1,1,1-Trichloroethane (see Methyl chloroform)					

Substance	CAS # [a]	WORKPLACE EXPOSURE STANDARDS TWA ppm[b]	TWA mg/m³[c]	STEL ppm[b]	STEL mg/m³[c]
1,1,2-Trichloroethane (skin)	[79-00-5]	10	55	–	–
* Trichloroethylene	[79-01-6]	50	269	200	1,070
Note: the NZ WES is higher than exposure limits set by other authorities, see appendix 6					
Trichlorofluoromethane	[75-69-4]	Ceiling 1,000 ppm (5,620 mg/m³)			
Trichloromethane (see Chloroform)					
Trichloronaphthalene (skin)	[1321-65-9]	–	5	–	–
Trichloronitromethane (see Chloropicrin)					
1,2,3-Trichloropropane (skin)	[96-18-4]	10	60	–	–
1,1,2-Trichloro-1,2,2-trifluoroethane	[76-13-1]	1,000	7,670	1,250	9,590
Tricyclohexyltin hydroxide (see Cyhexatin)					
Tridymite (see Silica-Crystalline)					
Triethanolamine (A2, 1994)	[102-71-6]	–	5	–	–
* Triethylamine (skin, 1994)	[121-44-8]	3	12	5	20
Trifluorobromomethane	[75-63-8]	1,000	6,090	–	–
* Trimellitic anhydride (sen)	[552-30-7]	0.005	0.039	–	–
* Trimethylamine	[75-50-3]	10	24	15	36
Trimethyl benzene	[25551-13-7]	25	123	–	–
Trimethyl phosphite	[121-45-9]	2	10	–	–
2,4,6-Trinitrophenol (see Picric acid)					
2,4,6-Trinitrophenylmethylnitramine (see Tetryl)					
2,4,6-Trinitrotoluene (skin)	[118-96-7]	–	0.5	–	–
Triorthocresyl phosphate (skin)	[78-30-8]	–	0.1	–	–
Triphenyl amine	[603-34-9]	–	5	–	–
Triphenyl phosphate	[115-86-6]	–	3	–	–
Tripoli (see Silica-Crystalline)					
Tungsten, as W	[7440-33-7]				
Insoluble compounds		–	5	–	10
Soluble compounds		–	1	–	–
Turpentine (wood ≈$C_{10}H_{16}$) (sen)	[8006-64-2]	100	556	–	–
Uranium (natural) soluble & insoluble compounds, as U	[7440-61-1]	–	0.2	–	–

Substance	CAS # [a]	WORKPLACE EXPOSURE STANDARDS TWA ppm[b]	TWA mg/m3[c]	STEL ppm[b]	STEL mg/m3[c]
n-Valeraldehyde	[110-62-3]	50	176	–	–
Vanadium, as V_2O_5	[1314-62-1]				
Respirable dust & fume		–	0.05	–	–
Vegetable oil mists		–	10[d]	–	–
* Vinyl acetate	[108-05-4]	10	35	20	70
Note: the NZ WES is higher than exposure limits set by other authorities, see appendix 6					
Vinyl benzene (see Styrene)					
Vinyl bromide (A2)	[593-60-2]	5	22	–	–
Vinyl chloride (A1)	[75-01-4]	5	13	–	–
Note: the NZ WES is higher than exposure limits set by other authorities, see appendix 6.					
Vinyl cyanide (see Acrylonitrile)					
* 4-Vinyl cyclohexene (see Notice of Intended Changes and Additions)					
Vinyl cyclohexene dioxide (skin, A2)	[106-87-6]	10	57	–	–
Vinylidene chloride	[75-35-4]	5	20	20	79
Vinyl toluene	[25013-15-4]	50	242	100	483
Warfarin	[81-81-2]	–	0.1	–	–
Welding fumes (Not otherwise classified)		–	5[i]	–	–
White spirits (Stoddard solvent)	[8052-41-3]	100	525	–	–
Note: the NZ WES is higher than exposure limits set by other authorities, see appendix 6.					
Wood dust (sen)					
certain hard woods as beech & oak		–	1	–	–
Soft wood		–	5	–	10
* Xylene (o-, m-, p-isomers) (1994)	[1330-20-7; 95-47-6; 108-38-3; 106-42-3]	80	350	150	655
m-Xylene α,α'-diamine (skin)	[1477-55-0]	Ceiling 0.1 mg/m3			
Xylidine mixed isomers (skin, A2, 1994)	[1300-73-8]	0.5	2.5	–	–
Yttrium metal & compounds, as Y	[7440-65-5]	–	1	–	–
Zinc chloride fume	[7646-85-7]	–	1	–	2
Zinc chromates, as Cr (A1)	[13530-65-9; 11103-86-9; 37300-23-5]	–	0.01	–	–
Zinc oxide fume	[1314-13-2]	–	5	–	10
Dust		–	10[d]	–	–
Zirconium & compounds, as Zr	[7440-67-2]	–	5	–	10

NOTES

The following footnotes apply to the tables on pp 26-56. For convenience, these have also been provided on a separate bookmark.

(a) CAS #, Chemical Abstracts Service Registry. A unique numbering identifier is assigned to each individual chemical.

(b) Parts of vapour or gas per million of contaminated air by volume at 25°C and 760 torr.

(c) Milligrams of substance per cubic metre of air.

(d) The value is for inspirable dust containing no asbestos and less than 1% free silica. (See appendix 1).

(e) Fibres longer than 5mm and with an aspect ratio equal to or greater than 3:1 as determined by the membrane filter method. Asbestos levels can be changed by *Gazette* notice.

(f) STEL level deleted.

(g) Lint-free dust as measured by the vertical elutriator cotton-dust sampler described in the *Transactions of the National Conference on Cotton Dust*, p.33, by J. R. Lynch (May 2, 1970).

(h) Respirable dust. (See appendix 1).

(i) A range of airborne contaminants are associated with gas and arc welding. The type of metal being welded, the electrode employed and the welding process will all influence the composition and amount of fume. Gaseous products such as oxides of nitrogen, carbon monoxide and ozone may also be produced. In the absence of toxic elements such as chromium, and where conditions do not support the generation of toxic gases, the fume concentration inside the welder's helmet should not exceed 5 mg/m^3.

(j) Sampled by a method that does not collect vapour.

(k) Thermal decomposition of polytetrafluoroethylene (PTFE, teflon) has been shown to cause polymer fume fever. Although the decomposition products have been studied, no Workplace Exposure Standard is recommended at this stage.

(l) Does not include the stearates of the toxic metals.

(m) Biological monitoring recommended.

(n) The concentration of methyl alcohol excreted on urine is independent of urine volume, therefore a specific gravity correction is not necessary or desirable.

* See Notice of Intended Changes.

(A1) Confirmed human carcinogen. (See section 8).

(A2) Suspected human carcinogen. (See section 8).

(NZ) New Zealand variation.

(1994) 1994 change.

(skin) Skin absorption. (See section 9).

(sen) Sensitiser. (See section 11).

(bio) Exposure can also be estimated by biological monitoring.

		INTENDED CHANGES AND ADDITIONS			
		TWA		STEL	
Substance	CAS # [a]	ppm[b]	mg/m3[c]	ppm[b]	mg/m3[c]
Acetaldehyde	[75-07-0]	Ceiling 25ppm (45 mg/m3)			
Acetic anhydride	[108-24-7]	5	21	–	–
Acetone cyanohydrin, as CN (skin)	[75-86-5]	Ceiling 4.7ppm (5 mg/m3)			
Acetophenone	[98-86-2]	10	49	–	–
Adipic acid	[124-04-9]	–	5	–	–
Adiponitrile (skin)	[111-69-3]	2	8.8	–	–
Ammonium perfluorooctanoate (skin)	[3825-26-1]	–	0.01	–	–
Arsenic & soluble compounds, as As (A1, bio)	[7440-38-2]	–	0.01	–	–
Benzyl acetate	[140-11-4]	10	61	–	–
Bromine	[7726-95-6]	0.1	0.66	0.2	1.3
1,3-Butadiene (A2)	[106-99-0]	2	4.4	–	–
n-Butyl acetate	[123-86-4]	20	95	–	–
tert-Butyl alcohol	[75-65-0]	100	303	–	–
p-tert-Butyltoluene	[98-51-1]	1	6.1	–	–
Chromium (VI) compounds, as Cr Insoluble Cr (VI) compounds (sen, A1)		–	0.01		
Cobalt, elemental and inorganic compounds, as Co (sen, A2)	[7440-48-4]	–	0.02	–	–
2-N-Dibutylaminoethanol (skin)	[102-81-8]	0.5	3.5	–	–
o-Dichlorobenzene (skin)	[95-50-1]	25	150	50	301
p-Dichlorobenzene	[106-46-7]	10	60	–	–
1,1-Dichloroethane	[75-34-3]	100	405	–	–
Diethanolamine (skin)	[111-42-2]	0.46	2	–	–
Diethylamine (skin)	[109-89-7]	5	15	15	45
2-Diethylaminoethanol (skin)	[100-37-8]	2	9.6	–	–
Dimethylamine	[124-40-3]	5	9.2	15	27.6
Dimethylethoxysilane	[14857-34-2]	0.5	2.1	1.5	6.4
Dinitrotoluene (skin, A2)	[25321-14-6]	–	0.15	–	–
Epichlorohydrin (skin, A2)	[106-89-8]	0.1	0.38	–	–
EPN (skin)	[2104-64-5]	–	0.1	–	–
Ethylamine (skin)	[75-04-7]	5	9.2	15	27.6
Ethyl chloride (A2)	[75-00-3]	100	264	–	–
Heptachlor & heptachlor epoxide (skin, A2)	[76-44-8]	–	0.05	–	–
Hexachlorobenzene (skin, A2)	[118-74-1]	–	0.025	–	–
1,6 Hexanediamine	[124-09-4]	0.5	2.3	–	–
Hydrazine (skin, A2)	[302-01-2]	0.01	0.013	–	–

		INTENDED CHANGES AND ADDITIONS			
		TWA		STEL	
Substance	CAS # [a]	ppm[b]	mg/m3[c]	ppm[b]	mg/m3[c]
Hydrogen cyanide (skin)	[74-90-8]	Ceiling 4.7 ppm			
cyanide salts, as CN (skin)		Ceiling 5 ppm			
Kaolin	[1332-58-7]	–	2 Respirable dust [d]		
Lead, elemental and inorganic compounds, as Pb	[7439-92-1]	–	0.05	–	–
Lead chromate, as Pb (A2)	[7758-97-6]	–	0.05	–	–
Manganese elemental & inorganic compounds, as Mn	[7439-96-5]	–	0.2	–	–
Mercury, as Hg (skin, bio)	[7439-97-6]				
Alkyl compounds		–	0.01	–	0.03
Aryl compounds		–	0.1	–	–
Elemental & inorganic compounds including Hg vapour		–	0.025	–	–
Methylamine	[74-89-5]	5	6.4	15	19
4,4-Methylene bis (2-chloroaniline) (skin, A2)	[101-14-4]	0.01	0.11	–	–
Methyl hydrazine (skin, A2)	[60-34-4]	0.01	0.019	–	–
Methyl-tert butyl ether	[1634-04-4]	40	144	–	–
Nickel (sen, A1)	[7440-02-0]				
Elemental, insoluble & soluble compounds, as Ni		–	0.05	–	–
Nickel carbonyl, as Ni		Delete listing, included in listing for nickel			
Nickel sulphide roasting		Delete listing, included in listing for nickel, fume & dust, as Ni (sen, A1)			
Nitromethane	[75-52-5]	20	50	–	–
Oil mist, mineral severely refined		–	5[j]	–	–
Mildly refined as cyclohexane soluble particulate containing polynuclear aromatic hydrocarbons (PNAs) (A1)		–	0.2[j]	–	–
Perchloroethylene (A2)	[127-18-4]	25	170	100	685
Phenyl glycidyl ether (PGE) (sen, skin, A2)	[122-60-1]	0.1	0.6	–	–
Rosin core solder thermal decomposition products, as resin acids - colophony	[8050-09-7]	Sensitiser; reduce exposure to the lowest practicable level			
Silica fume	[69012-64-2]	–	2 Respirable dust [h]		
Sulfometuron methyl	[74222-97-2]	–	5	–	–
Terephthalic acid	[100-21-0]	–	10	–	–
Tetrahydrofuran (skin)	[109-99-9]	100	295	–	–
Tin					
Organic compounds as Sn (skin)	[7440-31-5]	–	0.1	–	0.2
Trichloroethylene	[79-01-6]	50	269	100	537

		INTENDED CHANGES AND ADDITIONS			
		TWA		STEL	
Substance	CAS # [a]	ppm[b]	mg/m^3[c]	ppm[b]	mg/m^3[c]
Triethylamine (skin)	[121-44-8]	1	4.1	5	20.7
Trimellitic anhydride (sen)	[552-30-7]	Ceiling 0.04 mg/m^3			
Trimethylamine	[75-50-3]	5	12	15	36
Vinyl acetate (A2)	[108-05-4]	10	35	15	53
4-Vinyl cyclohexene (A2)	[100-40-3]	0.1	0.4	–	–
Xylene (o-, m-, p-isomers)	[1330-20-7; 95-47-6; 108-38-3; 106-42-3]	50	217	–	–

Appendix 1: Inspirable and Respirable Dust

INSPIRABLE DUST

Criteria defining inspirable mass fractions have been proposed by the International Standards Organisation (ISO)[10] and by the ACGIH[11]. The definitions describe collection efficiency curves that pass through the following points:

d		0	10	30	60	100	185
% inspirability	ACGIH	100	77	58	51	50	*
% inspirability	ISO	100	73	52	34	20	0

* stated as unknown by ACGIH.

Where d is the equivalent aerodynamic diameter of the particle in µm.

Different types of sampling devices, that are specifically designed to conform to either specification, may give conflicting results if a significant proportion of the particles are larger than approximately 30µm. At present there is no one accepted procedure for obtaining a sample that accurately reflects the inspirable mass fraction (under various environmental conditions). For the purpose of these standards, the inspirable dust is to be collected according to the method set out in the Standards Australia publication AS 3640[12].

Two personal sampling heads are recommended: the modified United Kingdom Atomic Energy Authority (UKAEA) and the IOM inspirable dust sampling head developed by the UK Institute of Occupational Medicine, Edinburgh (see figures 1 and 2.)

Personal air sampling pumps to be used with either head should be capable of maintaining a smoth flow of 2 ± 0.1 litres/minute over the entire sampling period. (See the end of the section for notes on the selection of suitable filters.)

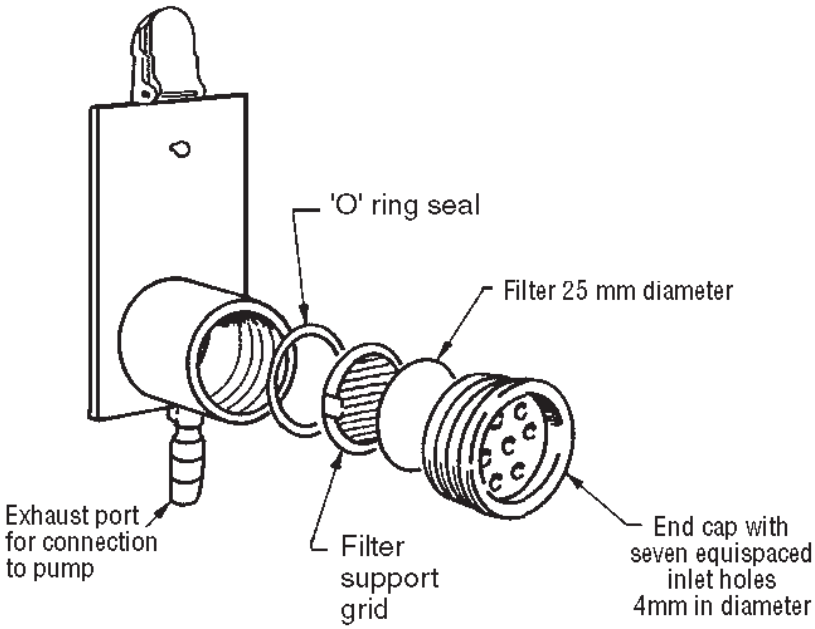

FIGURE 1: MODIFIED UKAEA PERSONAL SAMPLING HEAD

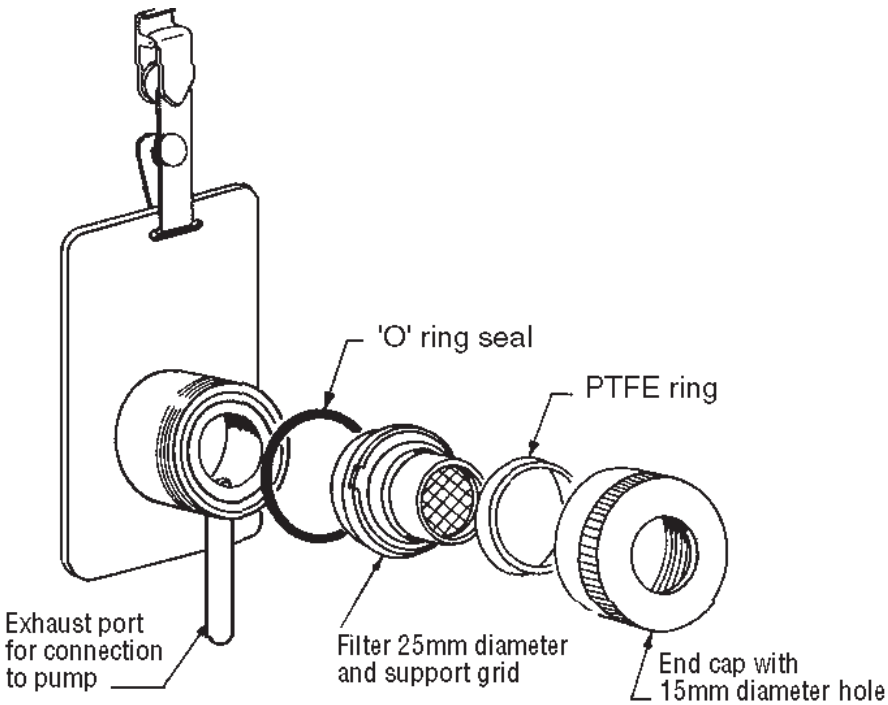

FIGURE 2: IOM INSPIRABLE DUST SAMPLING HEAD

RESPIRABLE DUST

The definition of respirable dust is the same as that adopted by the British Medical Research Council following the Pneumoconiosis Conference in 1959[13]. The recommended sampling efficiency defines a curve that passes through the following points:

d	0	1	2	3	4	5	6	7
Respirable %	100	98	92	82	68	50	28	0

Where d is the equivalent aerodynamic diameter of the particle in µm.

This distribution is known as the "Johannesburg Curve".

The respirable dust fraction is to be collected with a device that is capable of collecting a sample that conforms with the above curve. One system is a miniature cyclone (see figure 3), with a pump that can maintain a smoothed flow of 1.9 ± 0.1 litres/minute over the entire sampling period.

The method to be followed for the determination of respirable dust levels is set out in the Standards Australia publication AS 2985[14].

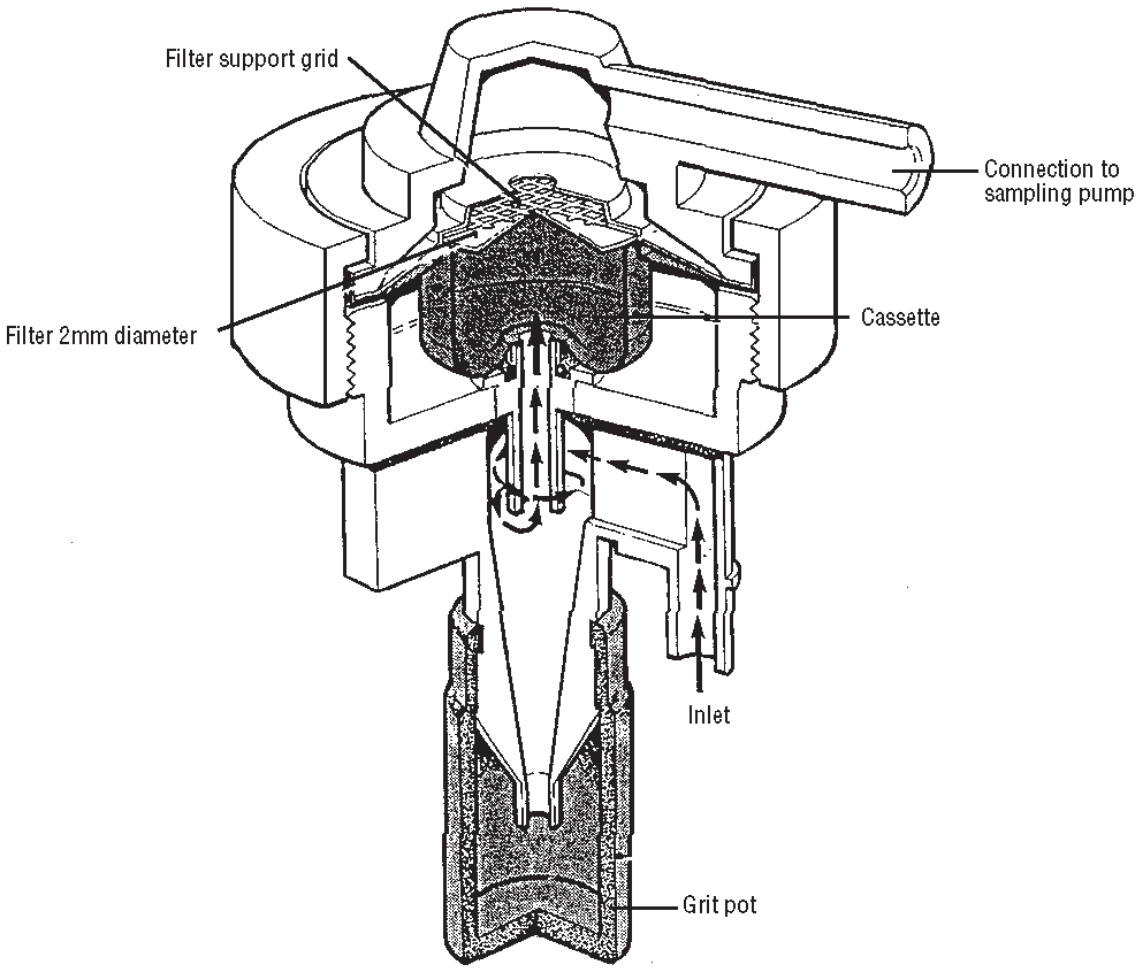

FIGURE 3: CYCLONE ELUTRIATOR

FILTERS (FOR INSPIRABLE AND RESPIRABLE SAMPLING)

Filters should have a nominal pore size of 5 µm or less (0.8 µm for polycarbonate filters). Selection of the filter material is dependent on the analytical requirements. For gravimetric measurements, a glass fibre filter is suitable. If a chemical assay or particle count on the collected substance is to be carried out, the methodology used will normally limit the choice of suitable filter material.

Electrostatic charges, loss of filter material or sample, and moisture variations can all be a problem. For example: PVC and polycarbonate filters are affected by electrostatic charges; moisture variations can create problems with the weight of cellulose nitrate filters; loss of filter material can occur during handling of glass fibre filters.

Appendix 2: Time-Weighted Average Calculation Guide

The Workplace Exposure Standard Time-Weighted Average (WES-TWA) relates to exposures that have occurred over any 24-hour period. All exposures over that period are treated as a single average 8-hour exposure, i.e. the 8-hour TWA may be expressed mathematically by:

$$\frac{C_1T_1 + C_2T_2 + \ldots . C_nT_n}{8}$$

Where C is the occupational exposure and T is the corresponding exposure period in hours.

The following examples illustrate the procedure that should be used to calculate exposure results for comparison with the 8-hour WES-TWA and 15-minute STEL.

Note: the intention is to demonstrate how the calculation is performed: there is no intention to promote a simple comparison between a one-off sampling result and the WES.

EXAMPLE 1

An operator works for 9 hours (including tea and meal breaks) in a job where the exposure to a substance is continuous but variable. The average exposure over the complete working day was found to be 120 mg/m^3. A WES-TWA of 150 mg/m^3 is listed for the substance.

The 8-hour TWA exposure is given by:

$$\frac{120 \text{ x } 9}{8} = 135 \text{ mg/m}^3$$

The 8-hour TWA level is below the WES-TWA of 150 mg/m^3.

EXAMPLE 2

An operator works for a total of 7 hours 30 minutes, including lunch, at a job where she is exposed intermittently to a substance. The following work pattern and exposures were recorded. A WES-TWA of 30 mg/m^3 and a STEL of 50 mg/m^3 are listed.

Time	*Tasks Performed*	*Exposure (mg/m^3)*
9000-1000	assembly line	23
1000-1130	driving	0 exposure assumed
1130-1200	assembly line	33
1200-1300	lunch	0 exposure assumed
1300-1600	assembly line	30
1600-1630	cleaning up	61

The 8-hour TWA exposure is given by:

$$\frac{(23 \times 1) + (0 \times 1.5) + (33 \times 0.5) + (0 \times 1) + (30 \times 3) + (61 \times 0.5)}{8} = 20 \text{ mg/m}^3$$

The 8-hour TWA level is below the WES-TWA of 30 mg/m^3.

Although a 15-minute sample was not taken, the WES-STEL of 50 mg/m^3 must have been exceeded during the 30-minute clean-up period, where an average level of 61 mg/m^3 was recorded.

Appendix 3: Mixed Exposures

If substances have a similar toxicologic action, then the following procedure may be used to assess the combined effect. For the mixture to be within the combined WES:

$$\frac{C_1}{WES_1} + \frac{C_2}{WES_2} + \frac{C3+}{WES_3} \ldots \frac{Cn}{WES_n} \text{ is to be less than 1}$$

Where C is the occupational exposure and WES is the corresponding Workplace Exposure Standard.

For example, the following personal air sampling results were recorded:

Substance	8-hour TWA level (mg/m^3)	WES-TWA
Toluene	54	188
Methyl chloroform	400	680
Total Hexanes	540	1760
n-Hexane	75	176

Applying the above expression for the components that are considered to have similar toxicologic effects:

$$\frac{54}{188} + \frac{400}{680} + \frac{540}{1760} = 1.2$$

The WES for the mixture is exceeded.

The n-hexane exposure is considered separately. 8-hour TWA exposure 75 mg/m^3, WES-TWA 176mg/m^3. The 8-hour TWA level is below the WES-TWA.

Appendix 4: Rubber Fume and Rubber Process Dust

The standards adopted for rubber process dust and rubber fume are those set by the UK Health and Safety Executive[19].

Rubber process dust refers to dust that is generated during the manufacture of goods using natural rubber or synthetic elastomers. Excluded from the definition are substances for which a specific workplace exposure standard has been assigned. Unless information to the contrary is available, these substances should be considered to be additive to rubber process dust and the method for assessing mixed exposures set out in appendix 3 applied. A personal inspirable dust sample is collected for comparison against the standard of 8 mg/m^3 for rubber process dust.

Rubber fume refers to any fume that is evolved during the blending, milling and curing of natural rubbers or synthetic elastomers. The limit of 0.6 mg/m^3 relates to the cyclohexane soluble material determined by the method: *Rubber Fume in Air, Measured as Total Particulates and Cyclohexane Soluble Material*[20].

Appendix 5: Lead Biological Exposure Indices

The Occupational Safety and Health Service publication *Guidelines for the Medical Surveillance of Lead Workers* specifies blood lead levels applicable for the monitoring of lead exposure in the workplace. The overall objective of the surveillance outlined in the guidelines is to maintain the blood lead levels of all workers below 1.5 μ mol/litre whole blood. Medical surveillance, including blood lead monitoring, is extended to all those working with lead in a process that may result in blood lead levels above 1.5 μ mol/litre whole blood.

A worker will normally be suspended by the departmental medical practitioner where:

(a) A single blood lead result is 3.2 μ mol/litre whole blood or greater; or

(b) Three consecutive monthly estimations are 2.6 μ mol/litre whole blood or above.

Appendix 6: Workplace Exposure Standards Proposed by Other Organisations

The New Zealand Workplace Exposure Standards have been endorsed after due consideration of the supporting information available. As with the standards listed by other national organisations, the majority of the New Zealand standards have been adopted from the ACGIH TLVs[1,2]. For some substances, the current New Zealand WES is higher (less stringent) than the corresponding standard set by other authorities. The following list identifies a number of those situations. More detailed information can be found elsewhere[2,18].

Abbreviations used are:

NIOSH REL	National Institute for Occupational Safety and Health Recommended Exposure Limits.
DFG MAK	Federal Republic of Germany Maximum Concentration Values in the Workplace
OSHA PEL	Occupational Safety and Health Administration Permissible Exposure Limits.

Acetaldehyde	NZ WES: TWA 180 mg/m^3, STEL 270 mg/m^3 Intended change, Ceiling 45 mg/m^3 DFG MAK: TWA 90 mg/m^3 ACGIH TLV: Ceiling 45 mg/m^3
Acetone	NZ WES: TWA 1185 mg/m^3, STEL 2375 mg/m^3 NIOSH REL: TWA 509 mg/m^3
Acetylene	NZ WES: listed as simple asphyxiant NIOSH REL: 15-minute ceiling 2500 ppm
Arsenic & Compounds as As	NZ WES: TWA 0.05 mg/m^3 Intended change, TWA 0.01 mg/m^3 NIOSH REL: 15-minute Ceiling 0.002 mg/m^3 ACGIH TLV: TWA 0.01 mg/m^3

Benzene	NZ WES: TWA 16 mg/m^3 OSHA PEL: TWA 3 mg/m^3, STEL 15 mg/m^3 (this standard does have limitations, see US Code of Federal Regulations 29 CFR 1910.1028) NIOSH REL: TWA 0.32 mg/m^3. STEL 3.2 mg/m^3
Beryllium & Compounds as Be	NZ WES: TWA 0.002 mg/m^3 OSHA PEL: TWA 0.002 mg/m^3, 30-minute STEL 0.005 mg/m^3 NIOSH REL: Ceiling 0.0005 mg/m^3
Butyl acetate - all isomers	NZ WES:TWA (n-) 713 mg/m^3, (sec- and tert-) 950 mg/m^3 Sweden: TWA 500 mg/m^3, STEL 700 mg/m^3
Cadmium	NZ WES: TWA 0.01 mg/m^3 OSHA PEL: TWA 0.005 mg/m^3 NIOSH REL: Lowest feasible concentration
Carbon disuphide	NZ WES: TWA 31 mg/m^3 OSHA PEL: TWA 12 mg/m^3, STEL 36 mg/m^3 NIOSH REL: TWA 3 mg/m^3, STEL 30 mg/m^3
Carbon tetrachloride	NZ WES: TWA 31 mg/m^3 OSHA PEL: TWA 12.6 mg/m^3 NIOSH REL: 60 minute STEL 12.6 mg/m^3
Chlorodiphenyl (42% chlorine)	NZ WES: TWA 1 mg/m^3 NIOSH REL: TWA 0.001 mg/m^3
Chlorodiphenyl (54% chlorine)	NZ WES: TWA 0.5 mg/m^3 NIOSH REL: TWA 0.001 mg/m^3
Chloroform	NZ WES: TWA 49 mg/m^3 NIOSH REL: 60 minute STEL 9.78 mg/m^3
Chromium (VI) water-soluble & certain water-insoluble as Cr	NZ WES: TWA 0.05 mg/m^3 Intended change: insoluble chromium (VI) compounds 0.01 mg/m^3 NIOSH REL: TWA 0.001 mg/m^3
Coal tar pitch volatiles, as solvent solubles	NZ WES: TWA 0.2 mg/m^3 NIOSH REL: TWA 0.1 mg/m^3
Cresol as isomers	NZ WES: TWA 22 mg/m^3 NIOSH REL: TWA 10 mg/m^3
Enflurane	NZ WES: TWA 75 ppm Australia: TWA 0.5 ppm Sweden: TWA 10 ppm

2-Ethoxyethanol	NZ WES: TWA 18 mg/m^3 NIOSH REL: TWA 1.8 mg/m^3
2-Ethoxyethyl acetate	NZ WES: TWA 27 mg/m^3 NIOSH REL: TWA 2.7 mg/m^3
Ethyl acetate	NZ WES: TWA 1,440 mg/m^3 Sweden: TWA 500 mg/m^3, STEL 1100 mg/m^3
Ethylene dichloride	NZ WES: TWA 40 mg/m^3 OSHA PEL: TWA 4 mg/m^3, STEL 8 mg/m^3 NIOSH REL: TWA 4 mg/m^3, STEL 8 mg/m^3
Fluorine	NZ WES: TWA 1 ppm OSHA PEL: TWA 0.1 ppm NIOSH REL: TWA 0.1 ppm DFG MAK TWA 0.1 ppm
Formaldehyde	NZ WES: Ceiling 1 ppm ACGIH TLV: Ceiling 0.3 ppm NIOSH REL: TWA 0.016 ppm, STEL 0.1 ppm
Halothane	NZ WES: TWA 50 ppm Australia: TWA 0.5 ppm Sweden: TWA 5 ppm
Heptane	NZ WES: TWA 1,640 mg/m^3, STEL 2,050 mg/m^3 Sweden: TWA 800 mg/m^3, STEL1200 mg/m^3
n-Hexane	NZ WES: TWA 176 mg/m^3 Sweden: TWA 90 mg/m^3, STEL180 mg/m^3
Hexane other isomers	NZ WES: TWA 1,760 mg/m^3, STEL 3,500 mg/m^3 Sweden: TWA 700 mg/m^3, STEL1100 mg/m^3
Isopropyl alcohol	NZ WES: TWA 983 mg/m^3, STEL 1,230 mg/m^3 Sweden: TWA 350 mg/m^3, STEL600 mg/m^3
Manganese	NZ WES: TWA 5 mg/m^3 OSHA PEL: Ceiling 5 mg/m^3 NIOSH REL: TWA 1 mg/m^3, STEL 3 mg/m^3
2-Methoxyethanol	NZ WES: TWA 16 mg/m^3 NIOSH REL: TWA 0.3 mg/m^3
2-Methoxyethyl acetate	NZ WES: TWA 24 mg/m^3 NIOSH REL: TWA 0.5 mg/m^3
Methyl isobutyl ketone	NZ WES: TWA 205 mg/m^3, STEL 307 mg/m^3 Sweden: TWA 100 mg/m^3, STEL200 mg/m^3
Methyl n-butyl ketone	NZ WES: TWA 20 mg/m^3 NIOSH REL: TWA 4 mg/m^3

Methyl chloroform	NZ WES: TWA 680 mg/m^3 Sweden: TWA 300 mg/m^3, STEL 500 mg/m^3
4,4-Methylene bis (2-chloroaniline)	NZ WES: TWA 0.22 mg/m^3 Intended change: WES: TWA 0.11 mg/m^3 NIOSH REL: TWA 0.003 mg/m^3
Nitrogen dioxide	NZ WES: TWA 5.6 mg/m^3, STEL 9.4 mg/m^3 OSHA PEL: Ceiling 1.8 mg/m^3 NIOSH REL: Ceiling 1.8 mg/m^3
Nitrous Oxide	NZ WES: TWA 50 ppm Australia: TWA 25 ppm NIOSH REL: TWA 25 ppm
Perchloroethylene	NZ WES: TWA 335 mg/m^3, STEL 1050 mg/m^3 Intended change: WES: TWA 170 mg/m^{3,} STEL 685 mg/m^3 Sweden: TWA 70 mg/m^3, STEL 170 mg/m^3
Propane	NZ WES: listed as simple asphyxiant OSHA PEL: 1000 ppm NIOSH REL: 1000 ppm DFG MAK 1000 ppm
Rubber solvent (Naphtha)	NZ WES: TWA 1600 mg/m^3 OSHA PEL: TWA 400 mg/m^3 NIOSH REL: TWA 400 mg/m^3
Tetraethyl lead	NZ WES: TWA 0.1 mg/m^3 OSHA PEL: TWA 0.075 mg/m^3 NIOSH REL: TWA 0.075 mg/m^3 DFG MAK 0.075 mg/m^3
Tetramethyl lead	NZ WES: TWA 0.15 mg/m^3 OSHA PEL: TWA 0.075 mg/m^3 NIOSH REL: TWA 0.075 mg/m^3 DFG MAK 0.075 mg/m^3
Trichloroethylene	NZ WES: TWA 269 mg/m^3, STEL 1,070 mg/m^3 Intended change: WES: TWA 269 mg/m^{3,} STEL 537 mg/m^3 Sweden: TWA 50 mg/m^3, STEL140 mg/m^3
Vinyl acetate	NZ WES: TWA 35 mg/m^3, STEL 70 mg/m^3 NIOSH REL: STEL 15 mg/m^3
Vinyl chloride	NZ WES: TWA 5 ppm OSHA PEL: TWA 1 ppm
White spirits (Stoddard solvent)	NZ WES: TWA 525 mg/m^3 NIOSH REL: TWA 350 mg/m^3 Sweden: TWA 300 mg/m^3

Biological Exposure Indices

1. Introduction

Biological monitoring — the measurement of a substance or its metabolites in body fluids such as urine or blood — provides a complementary approach to air monitoring for the estimation of exposure to workplace contaminants.

A **Biological Exposure Index (BEI)** is defined as a corollary to the WES. *If a worker's inhalation exposure is equal to the WES, and he/she is engaged in moderate work, then the BEI represents the expected level of the biological determinant*. In most cases, the BEI has been derived from the observed relationship between the measured exposure and the biological level, but in some instances the relationship between the biological level and the potential health effects has been approached more directly.

Depending on the pharmacokinetics of the substance, the results from the biological determination may reflect very recent acute exposure, the average exposure over the last day(s), or long-term cumulative exposure. The BEIs listed assume that the exposure has been reasonably steady and that an 8-hour day, 5-day week has been worked. Extrapolation to other exposures can be made but only with a clear understanding of the relationship between absorption, metabolism, and elimination.

Biological monitoring has been widely used to monitor the uptake of cumulative toxins (e.g. lead, mercury, organophosphate insecticides). It also may be employed effectively where there is a significant potential for increased uptake as a result of skin absorption, increased respiratory rate, or exposure outside of the workplace. The effectiveness of measures taken to limit uptake may in some cases be assessed with biological tests. As with air monitoring, the design of the protocol and interpretation of results should only be done by a person with the appropriate qualifications and experience. The fact that a BEI has been listed for a particular substance does not imply that biological monitoring is necessary. An apprasial of the exposure should be made before considering monitoring requirements.

For a biological assay to be a reliable indicator of exposure to a substance, several conditions must be satisfied. The fate of the substance in the human body must have been adequately researched and the time/concentration relationship of the proposed determinant found. A dose-response relationship must exist but it need not be linear. It is not essential that the concentration of the determinant be zero in cases where there is no occupational exposure, as long as the increase is quantitatively observable above the background level. The biological assay must be sensitive and specific. While the concentration of the major metabolite may be high, and therefore easily detected, if it is a metabolite that is common to several substances the determination of the unaltered substance, or minor metabolite, may be preferable. The biological assay is often performed at a remote laboratory, therefore the determinant must be stable in the biological fluid.

2. Assigned Biological Exposure Indices

Generally a BEI associated with only one assay is given for exposure to each substance, even though there may be several possible ways of estimating exposure. Preference has been given to urinary assays over more invasive blood tests but factors such as the stability of the sample and the possiblity of interferences have also been considered. Cultural sensitivity of the worker towards submitting a particular type of sample may also influence the selection of the biological monitoring procedure. Alternative methods may be available, especially for monitoring the exposure to solvents [2,15].

For the routine surveillance of exposure to some substances, biological monitoring may be preferred over air sampling. For example, if the substance has a long half-time in the body, the biological monitoring assay will give a result that reflects an integrated exposure. In other cases the equivalent air sampling procedure may, because of the typical work practices or sampling difficulties encountered, give less reliable results.

Quantitative interpretation of biological monitoring results is often difficult. The quality of the information may be improved if the measurements obtained from several workers with similar exposure, or serial determinations on an individual worker, are considered.

Before undertaking a biological monitoring exercise, it is essential that background information be obtained, including data on the pharmacokinetics of the substance, interferences, and background levels of the determinant. The following two references are recommended as a source of relevant background material:

(a) ACGIH *Documentation of the Threshold Limit Values and Biological Exposure Indices*[2],

(b) *Industrial Chemical Exposure, Guidelines for Biological Monitoring*[15].

3. Sample Collection

It is important to observe the timing of sample collection that has been indicated for each determination. The level of a substance, or its metabolic products, will vary with time and the biological index in some situations is only applicable if the timing of sample collection is closely adhered to. Assuming that there has been continual exposure over the working day, the following sampling periods are defined:

Prior to Shift. Following a period of 16 hours with no exposure.

End of Shift. The last two hours to immediately following the end of the working day.

End of Work Week. After at least four days with exposure.

If the exposure has been confined to a portion of the working day, then it may be necessary to adjust the timing, but it must be considered that the estimation of exposure may be compromised. Contamination of the sample may take place during collection as a result of inadequate cleaning of the skin prior to taking a blood sample, or other inadvertent contamination of a specimen. Loss of sample integrity on storage and transport may occur through the use of an inappropriate container. Further details of the procedure to be followed for sample collection and handling should be obtained from the laboratory that is to carry out the analysis.

4. Reporting of Results

UNITS

Various units are used to report the results of biological monitoring assays. The following relationships may be applied to convert between the more common units:

$$\text{moles/litre (mol/l)} = \text{gram/litre(g/l)} \times \frac{1}{\text{formula weight}}$$

For example, to convert a urinary mercury result of 80 µg/l to the corresponding molar concentration:

$$80\mu/l = \frac{80}{200.59 \text{ (atomic wt. mercury)}} \ \mu\text{mol/l}$$

$$= 0.4 \ \mu\text{mol/l}$$

URINARY ANALYSIS

To reduce the variation in results due to dilution, it is common practice to perform adjustments to the observed concentration of the determinant in spot urine samples. Correction to a specific gravity (SG), or urinary creatinine excretion rate, are two of the more commonly used methods. While the effectiveness of correction procedures is debatable, a reduction in the variability of results is obtained for most biological assays. It is recommended that the urinary assay results be corrected to a specific gravity of 1.020 as follows:

$$\text{Corrected result} = \frac{\text{Observed concentration} \times 0.020}{\text{SG} - 1.000}$$

5. Interpretation of Results

Biological monitoring data must be interpreted with some caution. There are several reasons why the levels of the determinant may vary given identical exposure situations. Workers may differ in size, physical fitness and work practices resulting in differing uptakes through variations in respiration rate and skin absorption. Further, there may be inter-individual differences in metabolism and elimination rates of the absorbed substance or determinant.

The concentration of the substance in air will fluctuate within and between workdays. From uptake to elimination there will be some smoothing effect but this need not mirror the integration that has been applied by time-weighting the air sampling result. For the relationship between the air level and biological determinant to hold over a range of air levels, the elimination rate must reflect the rate of uptake. This does not always hold. In some cases a particular step in the metabolic process may become saturated or may be inhibited by the presence of another substance.

Further advice on the application of biological monitoring can be obtained from the Occupational Health Services section of OSH.

Exposure	Assay	Sample	Sampling Time	BEI
* Acetone	(see Notice of Intended Changes and Additions)			
* Arsenic (inorganic)	sum of inorganic arsenic, methylarsonic acid and dimethylarsinic acid	urine	end of shift at end of work week	1.3 µmol/litre (100 µg/litre)
Cadmium	cadmium	blood	not critical	0.09 µmol/litre (10 µg/litre)
		urine	not critical	10 µmol/mol creatinine (10 µg/g creatinine)
Carbon monoxide	carboxyhaemoglobin	blood	end of shift	3.5% of haemoglobin
Chromium (VI) water-soluble fume	chromium	urine	end of shift at end of work week	0.6 µmol/litre (30 µg/litre)
* 2-Ethoxyethanol, and 2-Ethyoxyethyl acetate	(see Notice of Intended Changes and Additions)			
Fluoride	fluoride	urine	prior to shift end of shift	160 µmol/litre (3 mg/litre) 560 µmol/litre (10 mg/litre)
n-Hexane	2,5-hexanedione	urine	end of shift	5 mg/litre
Lead (inorganic)	lead	blood	not critical	see appendix 5
		urine	not critical	0.72 µmol/litre (150 µg/litre)
Lead (tetraalkyl)	lead	urine		0.48 µmol/litre (100 µg/litre)
Mercury	mercury	urine	not critical	0.25 µmol/litre (50 µg/litre)
* Methanol		urine	end of shift	15 mg/litre [(n)]
Methyl chloroform	(see 1,1,1-Trichloroethane)			
Methyl ethyl ketone (MEK)	MEK	urine	end of shift	2 mg/litre
* Methyl isobutyl ketone (MIBK)	(see Notice of Intended Changes and Additions)			

BIOLOGICAL EXPOSURE INDICES				
Exposure	**Assay**	**Sample**	**Sampling Time**	**BEI**
Organophosphates	cholinesterase activity	blood		See †
			† *% of Baseline*	*Recommended Action*
			less than 60%	Suspend from working with pesticides which inhibit cholinesterase activity.
			less than 80%	Action level: repeat test to confirm result.
			greater than 75%	Permit a previously suspended worker to recommence normal duties
Pentachlorophenol	total PCP including conjugates	urine	prior to last shift of week	1 mg/litre
* Perchloroethylene	(see Notice of Intended Changes and Additions)			
Styrene	mandelic acid	urine	end of shift	1 g/litre
1,1,1-Trichloroethane	trichloroacetic acid	urine	end of work week	10 mg/litre
Trichloroethylene	trichloroacetic acid	urine	end of work week	100 mg/litre
Xylene	methylhippuric acid	urine	end of shift	1.5 g/litre

Exposure	Assay	Sample	Sampling Time	BEI
Acetone	acetone	urine	end of shift	100 mg/litre
Arsenic (inorganic)	sum of inorganic arsenic, methylarsonic acid and dimethylarsinic acid	urine	end of shift at end of work week	BEI to be set consistent with the WES-TWA intended change
2-Ethoxyethanol, and 2-Ethyoxyethyl acetate	2-ethoxyacetic acid	urine	end of shift at end of work week	100 mg/g creatinine
Methyl isobutyl ketone (MIBK)	MIBK	urine	end of shift	2 mg/litre
Perchloroethylene	trichloroacetic acid	urine	end of work week	3.5 mg/litre

Workplace Exposure Standards for Noise

The current exposure standards for noise were adopted by the Department of Health in June 1982.

Whether or not a person is wearing appropriate hearing protection, the following values of noise exposure are considered to be the limit for an acceptable risk to their hearing:

Exposure to levels of noise during any single day greater than:

(a) A noise exposure level, $L_{Aeq,\ 8h}$ of 85 dB(A); and

(b) A peak noise level, L_{peak} of 140 dB.

Noise exposure level, $L_{Eq,\ 8h}$ means the level of the daily noise exposure normalised to a nominal 8-hour working day, in dB(A) referenced to 20 micropascals. It is the steady noise level which would, in an 8-hour period, cause the same A-frequency-weighted sound energy as that due to the actual noise over the actual working day, and is the same as $L_{Aeq,\ 8h}$ in AS 1269.

Peak noise level L_{peak} means the highest frequency-unweighted peak sound pressure level in decibels referenced to 20 micropascals, measured using sound measuring equipment with "P" time-weighting, as specified in Australian Standard AS 1259.1 — *Sound Level Meters, Part 1: Non-integrating*.

Noise exposure $E_{A,T}$ in pascal-squared-hours (Pa^2h) is the time integral of squared instantaneous A-frequency weighted sound pressure over a particular time period, for example over a 24-hour period.

Examples of levels of noise exposure resulting in a noise exposure of 1 Pa^2h are listed in the table below:

$L_{Aeq,T}$ (dB(A))	Duration per Day (T)	$E_{A,T}$ (Pa^2h)
85 dBA	8 hours	1
88	4	1
91	2	1
94	1	1
97	30 min	1
100	15	1
102	8	1
106	4	1
109	2	1
115	30 secs	1

Workplace Exposure Standards for Hot Environments

INTRODUCTION

This workplace exposure standard covers the measurement of *heat stress,* and the management of hot environments to which workers may be exposed. Compliance with this standard should prevent heat stress and provide for conditions under which, it is believed, that nearly all workers may be repeatedly exposed without adverse health effects.

The term heat stress refers to the adverse effects on the human body that occur when it is not able to dissipate sufficient heat. Heat that originates either as a result of exposure to sources of heat in the external environment, or generated internally by metabolic activity. The result of this inability to lose sufficient heat causes the body's core temperature, normally at 37-38°C, to begin to rise. Such a rise in core temperature can result in serious harm, and may even be fatal.

Workers should not be permitted to continue their work where their core body temperature exceeds 38°C.

These standards are based on the assumption that nearly all acclimatised, fully clothed workers (e.g. wearing lightweight shirt and trousers [= 0.6 Clo]), with adequate water intake, should be able to function effectively under a given working condition without exceeding the normal core body temperature of between 37-38°C.

HEAT STRESS MEASUREMENT

As in most cases, it is not practical to measure core body temperature directly as an indication of workers' heat balance. The method described here is a predictive, empirical index based on the measurement of environmental factors, i.e. wet bulb globe temperature (WBGT). This index is easy to determine and well suited to the occupational environment. The specific method followed is that described in International Standard ISO 7243 *Hot Environments: Estimation of the heat stress on working man, based on the WBGT index*. This standard has been endorsed by Standards New Zealand for use in this country, and is the method adopted, with minor modifications (indicated by italics), in this workplace exposure standard.

This workplace exposure standard requires the estimation of work effort, the insulatory effects of clothing. and the measurement of WGBT, with corrections where required for variability in:

(a) heat loading to different parts of the body;

(b) exposure time to hot environments;

(c) working in various locations with different thermal environments.

The WBGT-index is derived from the measurement of three environmental factors: wet bulb temperature, globe temperature, and if measurement is taking place outside in direct sunlight, then also the natural dry bulb temperature.

The two equations shown below are those used to calculate the WBGT from these three parameters.

$$WBGT = 0.7t_{nw} + 0.3t_g$$

or

$$WBGT = 0.7t_{nw} + 0.2t_g + 0.1\,t_a \text{ (in direct sunlight)}$$

where t_{nw} = natural wet bulb temperature°C,

t_g = standard globe temperature°C,

t_a = dry bulb air temperature°C.

Each of the three environmental taemperatures measured requires the use of a separate measurement device: a black bulb globe thermometer, a natural (static) wet bulb thermometer, and a dry bulb thermometer. Detailed specifications for the construction and operational parameters of each are given in ISO 7243. In brief, the specifications of the three devices should be as follows:

Wet bulb temperature: measuring range 5 - 40°C with an accuracy of ± 0.5°C.

This is the natural wet bulb temperature and is different from the thermodynamic temperature determined with a sling psychrometer.

Globe temperature: measuring range 20 -120°C with an accuracy of ± 0.5.°C

This should be a 150 mm sphere with the temperature sensor placed at the globe centre. For the purposes of this standard, a smaller 50 mm globe will be accepted.

Dry bulb temperature: measuring range 10 - 60°C with an accuracy of ± 1.0°C.

The sensor must be protected from radiant heat sources.

The temperature sensors can be of traditional construction utilising glass thermometers, or, as is now more usual, electronic sensors that automatically integrate the separate readings to produce a WBGT result automatically.

Figure 4 illustrates a simple WBGT sensor array employing glass thermometers, and figure 5 a typical electronic-type sensor.

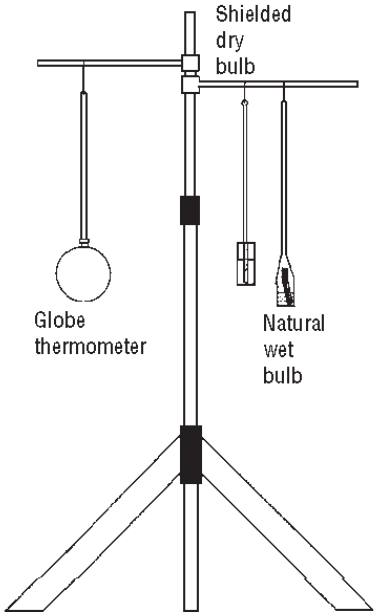

FIGURE 4: A TYPICAL ARRANGEMENT OF A SIMPLE WBGT TRANSDUCER SET

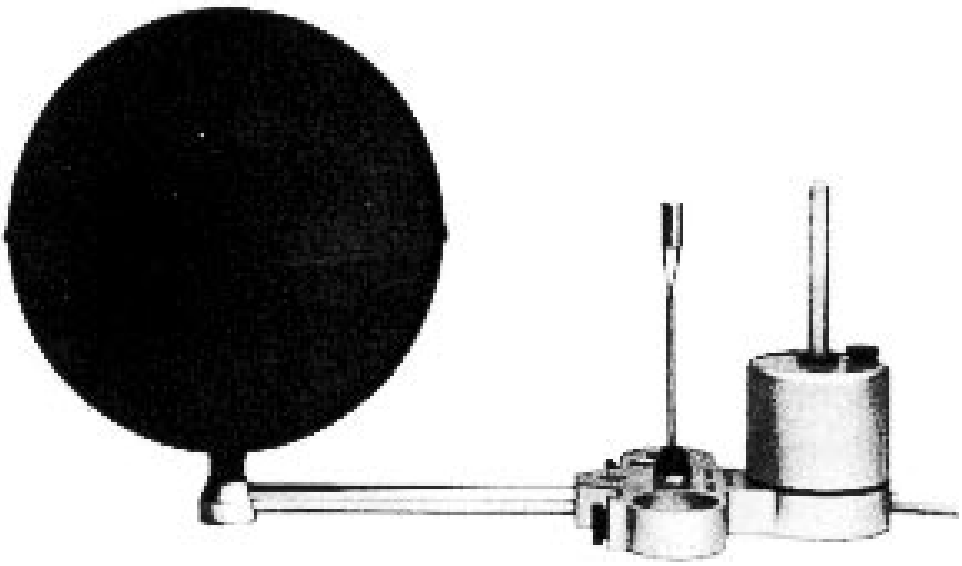

FIGURE 5: TYPICAL CONSTRUCTION OF A MODERN WBGT TRANSDUCER

CORRECTING OF WBGT FOR VARIATIONS IN HEAT LOADING TO PARTS OF THE BODY

Where heat loading is fairly consistent over the whole body, then only one set of WBGT measurements need to be taken, and this should be at the level of the abdomen, which will vary according to the posture of the worker. In industry, the source of heat that a worker may be exposed to frequently originates from a particular point and affects just a portion of the body, rather than the load being evenly spread over the whole body. ISO 7243 recommends that under such circumstances, three transducers should be used concurrently to measure the WBGT-index. *However, for the purposes of this workplace exposure standard, and as most WBGT arrays consist of a single set of transducers, consecutive readings at each of the following positions are also acceptable, as long as exposure is reasonably constant*. Measurements should be obtained at the level of the head, abdomen, and ankle. The recommended height above floor level for the siting of the transducers is given in the following table:

	Recommended Heights of Transducer Above Ground	
	Standing Person	Seated Person
Ankle level	0.1m	0.1m
Abdomen level	1.1m	0.6m
Head level	1.7m	1.1m

The three individual WGBTs produced for each height are then combined to produce a weighted index for whole body exposure from the following equation:

$$WBGT_{(\text{whole body weighted})} = \frac{WBGT_{(\text{head})} + 2WBGT_{(\text{abdomen})} + WBGT_{(\text{feet})}}{4}$$

When positioning the transducers, it is important that their exposure to heat should be the same as that experienced by the worker. Care should therefore be taken to ensure that:

(a) The transducers are as close as possible to the work station under investigation.

(b) The transducers are not placed so as to screen them from radiant heat sources.

(c) The sample period is representative of 'normal' working conditions.

To ensure compliance with point (c), the ISO recommends that the WBGT should always be given as a time-weighted average, with a minimum sampling period of 1 hour. This applies whether readings are obtained from one or more transducer sets.

CORRECTION OF WBGT FOR VARIATIONS IN EXPOSURE TIME AND LOCATION

When a worker's exposure to heat is spasmodic, occurs at a number of locations, or consists of exposure to variable heat loadings, it is necessary to measure the WBGT level and exposure time for each. The separate measurements are then combined using the following equation:

$$WBGT_{(time/location\ weighted)} = \frac{(t_1 \times WBGT_1) + (t_2 \times WBGT_2) \ldots (t_n \times WBGT_n)}{t_1 + t_2 + \ldots + t_n}$$

where $WBGT_n$ = WBGT determined for situation n

t_n = time in minutes at situation n = ≥1 hour

The WBGT(time/location-weighted) averages the WBGT for variations in work duration and location. Taken with any corrections required for variations in body loading, an overall corrected measurement of WBGT is calculated. To enable an interpretation of the WBGT value to be made, the figures need to be interpreted to predict the likelihood of heat strain occurring.

To assess the probability of such an occurrence, we also need to know the amount of physical effort the worker puts into that particular job. The more physically demanding the job, then the greater the amount of internally generated metabolic heat there will be, and the lower the WBGT (the measure of external heat loading) at which heat stress could possibly occur. ISO 7243 adopts a simple method that breaks down work type into four categories, one of which needs to be selected that corresponds to the type of work under investigation (see table).

Few workers are exposed to the same level of heat throughout the working day. Most workers are involved in a variety of tasks, only some of which involve heat exposure. Using ISO 7243 it is therefore necessary to calculate the metabolic rate in Wm^2 from the above table for each of the tasks the worker carries out, and to find the time-weighted average for the period using the formula:

$$MR_{(time\text{-}weighted)} = \frac{(t_1 \times MR_1) + (t_2 \times MR_2) \ldots (t_n \times MR_n)}{t_1 + t_2 + \ldots + t_n}$$

where MR_n = metabolic rate determined for situation n [W/m^2]

t_n = time in minutes at situation n

From this time-weighted average, the corresponding classification 1-4 of work activity is then chosen. The following is an example of how this calculation of the time-weighted metabolic rate is worked out.

Class	Metabolic Rate Range M		Value to be Used for Calculation of Mean Metabolic Rate		Examples
	Related to a Unit Skin Surface Area	For A Mean Skin Surface Area of $1.8m^2$			
	Wm^2	W	Wm^2	W	
O Resting	M < 65	M < 117	65	117	Resting
1 Low metabolic rate	65 < M < 130	117 < M < 234	100	180	Sitting at ease: light manual work (writing, drawing, sewing, book keeping, hand and arm and leg work (driving vehicle in normal conditions, operating foot switch or pedal). Standing: drill (small parts); milling machine (small parts; coil winding; small armature winding; machining with low-power tools; casual walking (speed up to 3.5 k/h).
2 Moderate metabolic rate	130 < M < 200	234 < M < 360	165	297	Sustained hand and arm work (hammering in nails, filing); arm and leg work (off-road operation of lorries, tractors or construction equipment); arm and trunk work (work with pneumatic hammer, tractor assembly; plastering, intermittent handling of moderately heavy material, weeding, hoeing, picking fruit or vegetables); pushing or pulling light-weight carts or wheel barrows; walking at a speed of 3.5 to 5.5 km/h; forging.
3 High metabolic rate	200 < M < 260	360 < M < 468	230	414	Intense arm and trunk work: carrying heavy material; shovelling, sledge hammer work; sawing, planing or chiselling hard wood; hand mowing; digging; walking at a speed of 5.5 to 7km/h. Pushing or pulling heavily loaded hand carts or wheel barrows; chipping castings; concrete block laying,
4 Very high metabolic rate	M > 260	M > 468	290	522	Very intense activity at fast to maximum pace ; working with an axe; intense digging or shovelling; climbing stairs, ramp or ladder; walking quickly with small steps; running or walking at a speed greater than 7km/h.

CLASSIFICATION OF LEVELS OF METABOLIC RATE

EXAMPLE

A person acclimatised to heat works according to the following schedule:

Time	Metabolic Rate	WBGT
20 mins	230 W/m^2	28°C
30 mins	165 W/m^2	28°C
10 mins	65 W/m^2	28°C

The time-weighted average of the metabolic rate is then:

$$\text{MR (time-weighted)} = \frac{(20 \times 230) + (30 \times 165) + (10 \times 65)}{20 + 30 + 10} = 170 \text{ Wm}^2$$

From the previous table, 170 W/m^2 can be seen to correspond to a time-weighted activity classification of 2 — moderate metabolic rate.

Having obtained WBGT readings adjusted for whole body exposure and work pattern, these figures can then be compared to the reference values printed in Annex A of ISO 7243 (see table).

Metabolic Rate Class	Metabolic Rate M		Reference Value of WBGT			
	Related to a Unit Skin Surface Area	Total (for a Mean Skin Surface Area of 1.8m^2)	Person Acclimatised to Heat		Person Not Acclimatised to Heat	
	W/m	W	°C		°C	
O (resting)	M < 65	M < 117	33		32	
1	65 < M < 130	117< M < 234	30		29	
2	130 < M < 200	234 < M < 360	28		26	
3	200 < M < 260	360 < M < 468	No sensible air movement 25	Sensible air movement 26	No sensible air movement 22	Sensible air movement 23
4	M > 260	M >468	23	25	18	20

ISO7243 ANNEX A - REFERENCE VALUES OF THE WBGT HEAT STRESS INDEX

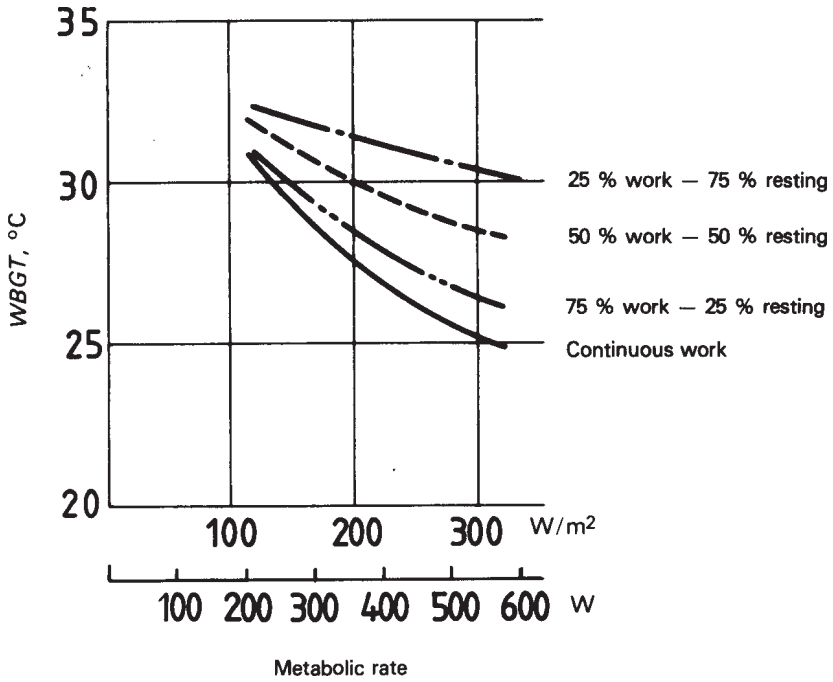

ISO 7243, like many other heat stress standards, assumes that workers are healthy, physically fit for the level of activity being done, and wearing light clothing with an insulatory factor of 0.6 Clo. The reference levels described above are designed to give the maximum WBGT at which most such workers can safely work for prolonged periods, without giving rise to potentially dangerous increases of more than a 1°C in the core temperature.

It must be pointed out that the reference levels are not intended to ensure that all workers are protected, but that almost all are protected. Care must therefore be taken where conditions approach the reference level to ensure the suitability of staff expected to work under such conditions.

The standard does not take account of peak values of heat stress that might be experienced for short periods, either as a result of exposure to a particularly hot environment, or a sudden burst of activity.

Exceeding the reference limits does not necessarily indicate the inevitability of serious consequences, or that all work must immediately cease. It implies that precautions need to be taken when continuing the work. The easiest way to achieve this is to alter the pattern of work/rest periods as described in Annex B of ISO 7243 (this does not form part of the official standard). (See figure above.)

These curves are included in the ISO for information only, to facilitate the reorganisation of work/rest cycles. Where the reference values previously described are exceeded, action should be taken wherever possible through engineering changes, or other means, to reduce the WBGT to which workers are exposed.

Where heat exposure exceeds the limits of the described work/rest cycles, then exposure to such environments must only take place where workers are under close medical supervision. Personal monitors that indicate changes are also available that can *assist* in such close medical supervision.

EFFECTS OF CLOTHING ON HEAT EXCHANGE

Clothing serves as a protective barrier between the environment and the human body. In many occupational settings, special clothing is worn to protect against hazardous chemical, physical or biological agents.

Irrespective of whether heat is one of those agents that the clothing is designed to protect against, it will still alter the rate and amount of heat exchange between the skin and the external environment. In general, the thicker and/or the greater is the vapour impermeability of the garments worn, the greater is the interference with normal heat exchange. In any consideration of the potential likelihood of heat stress occurring, the type of clothing worn by workers must be included.

The overall insulatory effects of different types of clothing can be expressed as a thermal insulatory index, in units called Clo's (1 Clo = 0.155 m^2 K/W). The reference values for WBGT given in ISO 7243 assume that clothing worn is of standard type (permeable to air and steam), having a thermal insulatory index value of 0.6 Clo. Where the Clo value of the clothing worn differs from this standard, alterations must be made to the **r**eference values adopted (see table).

Clothing Type	Clo Value	WBGT Correction
Summer work uniform	0.6	0
Cotton coveralls	1.0	-2
Winter work uniform	1.4	-4
Water barrier, permeable	1.2	-6

SUGGESTED CORRECTION FACTORS FOR CLOTHING (NOT PART OF ISO 7243)

References

(1) American Conference of Governmental Industrial Hygienists (ACGIH). *Threshold Limit Values and Biological Exposure Indices for 1993-1994*. ACGIH, Cincinnati, Ohio, (1993)*.

(2) American Conference of Governmental Industrial Hygienists (ACGIH). *Documentation of the Threshold Limit Values and Biological Exposure Indices*. 6th Edition, ACGIH, Cincinnati. Ohio*.

(3) National Occupational Health and Safety Commission. *Exposure Standards for Atmospheric Contaminants in the Occupational Environment*. Australian Government Publishing Service, Canberra, (1991).

(4) Deutsche Forschungsgemeinschaft (DFG). M*aximum Concentrations at the Workplace and Biological Tolerance Values for Working Materials 1986*. Report No.XXII, Commission for the Investigation of Health Hazards of Chemical Compounds in the Work Area, VCH Verlagsgesellschaft mbH, D-6940 Weinheim, Germany, (1986).

(5) Zielhuis R.L. et al. *Short-term Occupational Exposure Limits: A Simplified Approach*. International Archives of Occupational and Environmental Health, 61(3):207-201, (1988).

(6) Paustenbach D. J. "Occupational Exposure Limits, Pharmacokinetics, and Unusual Work Schedules", *Patty's Industrial Hygiene and Toxicology*. 2nd ed., Volume 3A, John Wiley and Sons, (1985).

(7) Health and Safety Executive (UK). *Monitoring Strategies for Toxic Substances*, Guidance Note EH42 (rev).

(8) National Institute for Occupational Safety and Health. *NIOSH Manual of Analytical Methods*, 3rd Edition, US Department of Health and Human Services, (1984).

(9) Health and Safety Executive (UK). *Methods for the Determination of Hazardous Substances* (MDHS Series).

(10) International Organisation for Standards (ISO). *Air Quality - Particle Size Fraction Definitions for Health Related Sampling*. Technical Report ISO TR 7708, Switzerland, (1983).

(11) American Conference of Governmental Industrial Hygienists (ACGIH). *Particle Size Selective Sampling in the Workplace*. ACGIH, Cincinnati, Ohio, (1985).

(12) Standards Australia, AS 3640:1989. *Workplace Atmospheres: Method for Sampling and Gravimetric Determination of Inspirable Dust*. Standards Australia, Sydney, (1989).

(13) Orenstein A.J. (Ed). *Proceedings of the 1959 Pneumoconiosis Conference*. Johannesburg, Churchill, London, (1960).

(14) Standards Australia, AS 2985:1987. *Workplace Atmospheres: Method for Sampling and Gravimetric Determination of Respirable Dust*. Standards Australia, Sydney, (1987).

(15) Lauwerys R.R and Hoet P. *Industrial Chemical Exposure, Guidelines for Biological Monitoring*. 2nd Ed. ISBN: 0-87371-650-7, (1993).

(16) National Occupational Health and Safety Commission. *Documentation of the Exposure Standards*. [NOHSC:10003(1990)], Australian Government Publishing Service, Canberra, (1990).

(17) Gunnar Johanson and Anders Boman. "Percutaneous absorption of 2-butoxyethanol vapour in human subjects". *British Journal of Industrial Medicine*, 48:788-792 (1991).

(18) American Conference of Governmental Industrial Hygienists. *Guide to Occupational Exposure Values1993*, ACGIH Cincinnati, Ohio, (1993)*.

(19) Health and Safety Executive (UK). *Occupational Exposure Limits 1993*. Guidance Note EH40/93.

(20) Health and Safety Executive (UK). *Rubber Fume in Air, Measured as Total Particulates and Cyclohexane Soluble Material*. MDHS 47.

* ACGIH address:
Kemper Woods Center
1330 Kemper Meadow Dr.
Cincinnati, Ohio 45240
FAX: 001 513 742 3355